GRANT **AGREEMENT NO.: 732174**

Call: H2020-ICT-2016-2017
Topic: ICT-13-2016
Type of action: RIA

Orchestration and Reconfiguration Control Architecture

1ST OPEN CALL FOR EXTENSIONS

TABLE OF CONTENT

1. General Open Call information 4
2. Call information 4
3. Project background 6
   3.1. The ORCA Project 6
   3.2. The ORCA consortium 8
   3.3. The ORCA facility 9
      The ORCA SDR Functionalities 10
      The ORCA Testbeds 11
4. General purpose of RFP (Request for Proposals) 14
   4.1. Scope of Work EXT1: End-to-end slicing support for SDR and SDN 15
      Introduction 15
      Functional Requirements 16
      Technical Requirements 17
      Validation Scenario 18
      Contact Person 19
      References 19
   4.2. Scope of Work EXT2: LBT functionality on FPGA as an IP core 20
      Introduction 20
      Functional requirements 20
      Technical requirements 21
      Validation scenario 21
      Contact person 22
      References 22
   4.3. Scope of Work EXT3: RAT interworking on NS-3 based SDR Prototyping Platform 23
      Introduction 23
      Functional Requirements 23
      Technical Requirements / Platform Requirements 24
      Validation Scenario 25
      Contact person 25
      References 25
   4.4. Scope of Work EXT4: Digital self-interference cancellation for in-Band Full Duplex 26
      Introduction 26
      Functional requirements: 27
      Technical requirements: 27
      Validation Scenario: 28
      Contact person 28
      REFERENCES 28
5. RFP process 28

5.1. Proposal Template 29
5.2. Evaluation criteria 31
Eligibility criteria 31
Proposal evaluation criteria 31
5.3. Submission Information 33
6. Terms & conditions 35
6.1. Support of Extension and role of Patron 35
6.2. Reporting 37
7. Financial information 39
7.1. Payment Scheme 39
ANNEX A: Proposal template 41
ANNEX B: Agreement for the integration of an Extension to the ORCA Platform for Experimentation 50

1. General Open Call information

The ORCA project hereby announces its first Open Call for Extensions.

This first Open Call for Extensions focuses on the development of missing functionalities to extend the ORCA software and hardware platforms.
In particular, this call targets four extensions:

- EXT1 - End-to-end slicing support for SDR and SDN
- EXT2 - LBT functionality on FPGA as an IP core
- EXT3 - RAT interworking on NS-3 based SDR Prototyping Platform
- EXT4 - Digital self-interference cancellation for in-Band Full Duplex

More information on the scope of this first Open Call can be found in Section 4 of this document.

2. Call information

Project full name:	ORCA - Orchestration and Reconfiguration Control Architecture
Project grant agreement number:	732174
Call identifier:	ORCA-OC1-EXT
Call title:	First ORCA Open Call for Extension
Submission deadline:	Wednesday the 15th November 2017, at 17:00 Brussels local time
Feasibility and Relevance check deadline:	Wednesday the 8th November 2017, at 17:00 Brussels local time

Financial information:

Call identifier	Call budget	Max. budget per Extension	Guaranteed support[1]
ORCA-OC1-EXT	**€ 300 000**	**€ 80 000**	**€ 18 000**
Expected number of Extensions to be funded			**4**

Requirements related to the proposer:

- Proposers must be eligible for funding in H2020 projects
- Proposals will only be accepted from a **single party**.
- A proposer can only be selected for funding for one proposal, even if the proposer submitted multiple proposals that are ranked high enough to be selected for funding. In the latter case, the proposer may be given the opportunity to choose the one to be retained for funding.

Other conditions:

- Language in which the proposal must be submitted: English
- Proposals must follow the provided template (see Section 5.1 of this document and Appendix A)
- Proposals (draft as well as final proposals) must be submitted through the online submission portal (accessible from http://www.orca-project.eu/open-calls)[2]

Contact: opencalls@orca-project.eu

[1] An extra budget of typically € 4500 per Extension will be allocated to the ORCA consortium partner acting as Patron for guaranteed support.

[2] Please note that the submission portal for ORCA Open Call proposals is NOT the H2020 portal.

3. Project background

End-to-end network functionality is best conceptualized using the 5 layer OSI model (Figure 1), that naturally splits the complete functionality into well-defined layers, where each layer is responsible for a well-defined set of tasks. SDR functionality typically focuses on the lowest layer of the OSI, model, emulating a full or partial physical layer on a reconfigurable platform. The advantage of SDR over **"off-the-shelf" technology** is that it enables a full and open implementation of all low layer functions, enabling innovation everywhere. The disadvantage is however that implementing a full PHY layer is quite complicated, and for a very long time the real-time execution of the PHY layer functionality was only possible for the slowest and simplest technologies, such as IEEE 802.15.4.

Recently, SDR technology is improving, and more and more HW-accelerated SDR functionality is becoming available. As a result, SDRs can even be used for some very high throughput and advanced 5G technology, such as Massive MIMO or mmWave. In parallel, open, reconfigurable and real-time MAC protocols are emerging. As a result, SDR PHY and MAC layer technology is becoming mature enough to start considering the concept of networked SDRs.

The ultimate goal of the ORCA project is to enable wireless experimenters to unlock the potential of reconfigurable radio technology, by setting up complex experiments that require control of multiple novel technologies or cooperation between multiple networked SDR platforms within 5G (or beyond 5G) performance constraints on latency or throughput, well before new radio technologies become available on the market in commercial off-the-shelf products.

3.1. The ORCA Project

The ORCA project is a Research and Innovation Action under the European Horizon 2020 Programme addressing the work programme topic Future Connectivity Systems. The project started in January 2017 and runs for 36 months, until the end of 2019.

The ORCA ambition is to enable end-to-end SDR networking by building SDR networks consisting of multiple SDRs, in various configurations, running multiple functionalities.

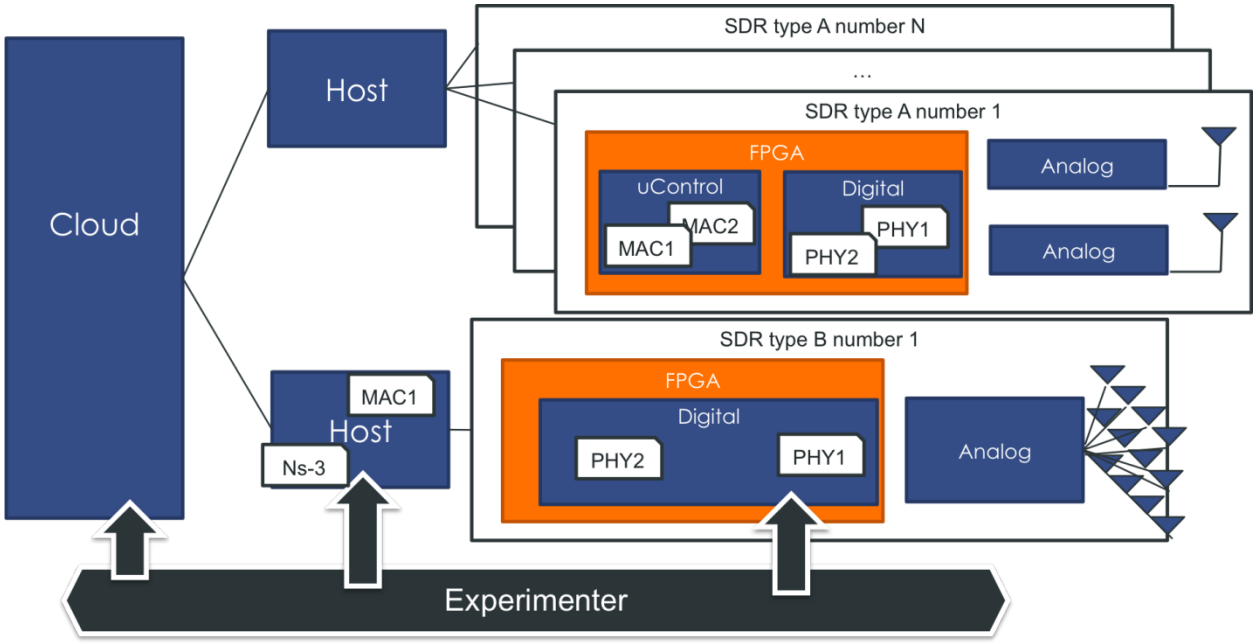

Figure 1 The ORCA architecture will focus on novel PHY and MAC functionality, that can be controlled and reconfigured in real-time over the air.

Referring to the ORCA Architecture which is shown in Figure 1, the ORCA project aim is to:

- identify novel wireless ***data plane functionality*** from PHY to network layer and implement it in SW or HW so that real-time end-to-end 5G experiments are enabled;
- identify novel control and monitoring functionality, together referred to as ***control plane functionality***, to enable smooth orchestration of the functional blocks. This means controlling functional blocks that are pre-loaded on the SDR, and can be controlled at runtime by updating parameter settings through an appropriate interface;
- identify novel reconfiguration methods to upgrade or modify the ORCA SDR functionalities at runtime or design time.
    - For design time, the project focuses on a higher level of configuration, namely composition, by selecting appropriate PHY and MAC functional blocks and perform fundamental changes on the transceiver chain at system level.
    - For runtime, the project focuses on both parametric configuration as well as loading novel PHY and MAC functional blocks implementations on the fly through live (partial) hardware and software reprogramming.

For more technical information about the ORCA project please visit the ORCA website (https://www.orca-project.eu/) and refer to the already published deliverables (https://www.orca-project.eu/resources/deliverables/)

3.2. The ORCA consortium

The consortium is composed by seven partners with complementary competences and demonstrated capability to provide a solid contribution to the project:

- **imec (**IMEC, ORCA Project Coordinator).
  Inter-university Microelectronics Center (IMEC) is a world-leading independent research center in nano-electronics and digital technology. IMEC's uniqueness relies in the combination of a widely acclaimed leadership in microchip technology and a profound software and ICT expertise. In ORCA, the IDLab research group of IMEC in Flanders in involved. IDLab performs applied research and development of high speed and densely deployed wireless Internet technologies and data science.

- **Trinity College Dublin (TCD)**
  TCD was founded in 1592 and is among the oldest universities in western Europe. It is recognized as the premier university in Ireland. CONNECT is Ireland's leading research centre in Future Networks and Communications, jointly funded by the Science Foundation Ireland and by industry. CONNECT is headquarted at Trinity College Dublin. The research efforts at CONNECT can be broadly described in four themes, namely the Internet of Things, the Service-Aware Networks, the Network-Aware Services, and the Integration and Testbeds. TCD brings extensive experience in intelligent reconfigurable radios and networks, and this expertise is used in ORCA on end-to-end network operation, and to contribute in the development of low-latency operation and reconfiguration solutions.

- **Katholieke Universiteit Leuven (KUL)**
  KU Leuven (KUL) boasts a rich tradition of education and research that dates back six centuries. KU Leuven is currently by far the largest university in Belgium in terms of research funding and expenditure (EUR 365 million in 2012), and is a charter member of the League of European Research Universities (LERU). The Electrical Engineering department at KU Leuven (ESAT) conducts research at a high international level. The division TELEMIC concentrates on telecommunications and microwave research, combining both strong theoretical, implementation and measurement expertise from electromagnetic propagation, antenna and RF circuit design, to telecommunication networks. In ORCA, the KUL testbed, consisting of networked real-time SDRs is made available. In addition, ESAT-TELEMIC exploits their mmWave expertise and test equipment, towards designing and realizing extensions of the Massive MIMO testbed towards mmWave.

- **Technische Universität Dresden (TUD)**
  Founded in 1828, Technische Universität Dresden (TUD) is a full-scale university with 14 faculties, covering a wide range of fields in science and engineering, humanities, social

sciences and medicine. TUD prides itself for its international flavour and has partnerships with more than 70 universities worldwide. Furthermore TUD is the only university in East Germany which has been granted a graduate school and a cluster of excellence in Germany's excellence initiative. In ORCE TUD will further evolve its current testbed into a Fed4Fire compliant indoor and outdoor testbed. Main focus of the experimentation platform is on macro and small cell scenarios for low latency and tactile internet applications.

- **National Instruments Dresden GmbH (NI)**
  NI is an industry partner in the ORCA project with a long history of designing and prototyping innovative test and measurement systems, e.g. in the RF space. Customers in nearly every industry—from healthcare and automotive to consumer electronics and particle physics—use NI's integrated hardware and software platform. NI is also collaborating with several top researchers focused on wireless research—specifically 5G wireless communications and is also actively engaged in the 3GPP standardization. The strong expertise in RF and wireless communications will help to provide ORCA feedback on the latest technology trends and products that will lead to a better practical relevance of the results.

- **Rutgers, The State University of New Jersey (RUTGERS)**
  Rutgers, The State University of New Jersey, is the largest and most comprehensive higher education institution in New Jersey founded in 1766. Wireless Information Laboratory (WINLAB) was founded in 1989 as an industry-university cooperative research centre at Rutgers University focusing on wireless technology. In ORCA the WINLAB develops functionalities for massive MIMO and cloud RAN and improves support for various radio platforms that are available in ORBIT.

- **Martel GmbH (MARTEL)**
  Martel is an innovative SME specialized in the management, dissemination, communication and promotion of international collaborative EC projects, with focus on ICT, Smart Cities and Future Internet. Martel leads the Communication, Dissemination and Exploitation work package playing a key role in the perspective of promoting the project outcomes and engaging a high number of experimenters in adoption of the ORCA's concepts and technologies. Martel also assists IMEC in the management and coordination of the various project's administrative activities.

3.3. The ORCA facility

One of the ORCA ambitions is to introduce advanced SDR functionalities in a number of Fed4FIRE compliant test facilities. The ORCA facility is the collection of wireless testbeds supported by ORCA hosting advanced SDR platforms, together with the code repositories and

toolsets needed to generate ORCA SDR functionalities. The ORCA SDR functionalities and testbed are described in the next sections.

The ORCA SDR Functionalities

An overview of the main SDR functionalities supported in the ORCA project is given below. For more detailed technical information, we refer to Deliverable 2.2 (https://www.orca-project.eu/resources/deliverables/) and the leaflets on the ORCA website (https://www.orca-project.eu/orca-functionalities/).

SDR data plane functionality

ORCA targets real-time end-to-end operation of SDR devices addressing technologies and scenarios as proposed in 5G or beyond, such as massive MIMO, mmWave, full duplex communication in dense networks, coexistence and interworking between multiple RATs, and mission critical communication.

At the PHY level, ORCA follows a HW accelerated SDR approach, and brings computationally intensive processing units like FEC encoder, IFFT and pulse shaping filtering down to the FPGA which increases computational throughput, required for real-time operation. PHY layer functionality is further improved to support new waveform modulation.

A tight integration of PHY and MAC (with implementation running on FPGAs as well as CPUs) allows fast response times and ensures real-time end-to-end operation between networked SDR devices and

SDR control plane functionality

By adding a control plane, ORCA aims fully leverage the flexible SDR functionality offered by the date plane for coping with a wide diversity of contexts and traffic demands. ORCA extends the SDR control plane with a diverse set of configuration, parameterization and monitoring functionalities that can be run and controlled at different levels of the protocol stack and on different resources of the SDR computational architecture. The offered functionalities include parameterisation interfaces of well-established RAT (Radio Access Technology) standards, runtime configuration and composition of PHY and MAC schemes in the same radio hardware resource, advanced monitoring tools for increased context-awareness, and physical resource slicing allocation and coordination mechanisms.

ORCA targets to bridge the gap between SDR and SDN and hence moves away from the context of one physical wireless network infrastructure for dealing with multiple traffic classes towards the virtualization of a network infrastructure into multiple independent slices, with each slice customized with the most appropriate PHY, MAC and network protocols and schemes for dealing with its respective traffic class.

SDR management plane functionality

ORCA also offers management functionality to support the data and control plane for updating and upgrading PHY and MAC functionality. Two options are considered in ORCA:

- ***over the testbed control backbone***: in this case (re)configurations and (partial) code updates are only possible when the SDR hardware is connected to the testbed control backbone, and the reconfiguration serves mainly the automated and remote control of SDR devices during experiments;
- ***over the air***: in this case, configurations and code updates are part of the solution under test and hence updates are also possible when the SDR hardware is disconnected from the testbed backbone and only has a wireless connection.

The ORCA Testbeds

Within the ORCA project diverse testbed facilities with complementary capabilities to enable innovative communications research are offered. In total 6 testbeds are available for experimentation by ORCA partners or by Third Parties selected via the Open Calls. In the following subsections all testbeds are briefly described focusing on major experimentation use cases as well as the general system features. For more detailed technical information on the testbeds, please refer to https://www.orca-project.eu/open-calls/.

IMEC w-iLab.t testbed for heterogeneous environments

- Testbed allows for indoor home, office, and industrial environment scenarios, as well as for mobile scenarios with up to 16 mobile robots.
- Support of heterogeneous scenarios involving multiple wireless technologies (WiFi-ZigBee coexistence, LTE-WiFi coexistence and load balancing, coexistence between LWPAN technologies).
- Testbed provides facilities for runtime reconfiguration of processing units of transceiver chain, as well as mechanisms for updating of MAC and networking protocols.
- Testbed includes various SDR platforms like Ettus/NI USRP, Xilinx Zync, WARP v2, as well as tools for MAC design and runtime MAC control (TAISC) and control and management SW architectures for IoT devices (GITAR).

IMEC Portable testbed

- Testbed is designed to be portable, i.e. it can be flexibly deployed in other locations (e.g. for measurements and experiments in other environments).
- From an architecture point of view, this testbed is identical to the w-iLab.t testbed (IMEC).
- Portable testbed also supports (compact) SDR platforms

RUTGERS ORBIT heterogeneous multi-node testbed

- Testbed provides facilities for heterogeneous indoor and outdoor experimentations with up to 400 nodes (9 sandboxes and outdoor deployment) that can be interconnected into specified topologies.
- Testbed includes various SDR platforms like Ettus USRP incl RF NoC, Nutaq Zepto SDR as well as WARP v1.
- Network provides a configurable mix of off-the-shelf wireless technologies, e.g. high-speed cellular (WiMAX, LTE) and 802.11 wireless access in real-world settings.
- Testbed provides facilities for runtime reconfiguration of processing units of transceiver chain as well as mechanism for updates of MAC and networking protocols.

TCD IRIS network virtualization testbed

- Testbed provides facilities for (static) indoor scenarios with up to 16 ceiling mounted USRP units, and approximately one dozen additional N- and X-series USRPs.
- Radio hardware is virtualized to support the experimental investigation of the interplay between radio capabilities and networks, e.g. allowing the combination of various physical layer approaches into coexisting or coherent networks.
- Platform is connected to a private computational cloud, allowing to deploy an array of computational environments.
- Testbed enables a wide range of dynamic spectrum access and cognitive radio experiments and provides a highly flexible architecture for real-time radio reconfigurability.
- Support of research on alternative waveforms (e.g. OFDM and FBMC), adaptive duplexing as well as adaptive network architecture demonstration (e.g. alternate between D2D and fixed infrastructure).

TUD macro scale testbed

- Real-time end to end outdoor and indoor experimentations representing macro and small cell scenarios with the focus on low latency and tactile internet applications
- Testbed includes multiple base stations (e.g. 2 at roof top) and several USRP based mobile user terminals (e.g. installed on bicycle rickshaw, mobile robots, measurement van)
- Testbed Includes sub-6 GHz links as well as mmWave links suitable for performance comparison and RAT interworking studies, e.g. LTE, New Waveforms / GFDM, new mmWave RAT
- mmWave link features small-form-factor integrated V-band RF with real-time configurable antennas typical for future mmWave enhanced small-cell network deployments
- Comparison of different backhaul technologies (wireless versus cable)
- Wide range of reconfigurable parameters like carrier frequency, transmit power and receive gain, modulation and coding scheme, resource blocks accessible from MAC layer, e.g. for scheduling experimentation.

KUL dense multi-node networks testbed

- Real-time indoor multi-node testbed with up to 45 USRP nodes jointly operating in distributed environments allowing for Massive MIMO and dense networks experiments.
- Testbed includes 3 rooms:
    - Anechoic room for measurements with 64 antennas, co-located or distributed around the room;
    - Lab experimentation room with 72 co-located and 8 distributed available in one additional room.
- Testbed includes sub-6 GHz links as well as mmWave link extensions (2x8) to create a 16 node mmWave mesh networks or 1 8x8 mmWave link.
- Testbed supports 802.11af / WiFi based networks that can be extended to Massive MIMO as well as the own developed IEEE 802.15.4 CLAWS platform.

All of the testbeds are installed in either office environments or other dedicated testbed environments. Because some research requires doing measurement campaigns or actual testing in heterogeneous environments, the ORCA project also offers a portable testbed to the community that can be deployed at any location, enabling experiments in real life environment involving real users in a big variety of scenarios.
The experimenter can use one user account to access all ORCA testbeds, including the portable testbed. The same user account can be used to access all Fed4FIRE testbeds.

Overview of supported SDR platforms

Testbed	w-iLab.t (IMEC)	ORBIT (Rutgers)	IRIS (TCD)	TUD Testbed	KUL Testbed	Portable Testbed
Nutaq ZeptoSDR		X				
Nutaq picoSDR		X				
PicoZed Xilinx Zynq®-7000 SoC		X			X	
USRP B200-mini	X	X				X
USRP E310		X				
USRP N210	X	X	X	X		
USRP X310	X	X	X			
USRP 2920				X		
USRP 2921					X	
USRP RIO 2942R					X	
USRP RIO 2943R	X				X	
USRP RIO 2952R (+ GPS)					X	
USRP RIO 2953R (+ GPS)				X		

WARPv2	X	X				
Xilinx ZC706 Evaluation Kit - Zynq® 7000 SoC + AD FMCOMM radio frontend	X					X
ZedBoard Xilinx Zynq®-7000 SoC		X				X
ZedBoard Xilinx Zynq®-7000 SoC + AD FMCOMM radio frontend	X					X
BB – NI PXI 7975 Module				X		
BB – NI PXI 7965 Module				X		
FE - NI PXI 5644				X		
FE – NI PXI 7976R					X	

*Legend: BB (baseband motherboard), FE (Frontend, RF daughterboard)

4. General purpose of RFP (Request for Proposals)

This call solicits proposals for the following topics of Extensions:

- EXT1 - End-to-end slicing support for SDR and SDN
- EXT2 - LBT functionality on FPGA as an IP core
- EXT3 - RAT interworking on NS-3 based SDR Prototyping Platform
- EXT4 - Digital self-interference cancellation for in-Band Full Duplex

ORCA aims at selecting one Extension proposal per topic. For more details about the topics please refer to the next subsections.

Extensions should be implemented and delivered within a time frame of maximum 9 months and should after delivery be made available at least until the end of the ORCA project to the ORCA consortium and to future external experimenters, either through subsequent (funded) open calls or (non-funded) open access, using of the ORCA testbeds and software tools, under the terms and conditions stipulated in the Agreement for extending the ORCA facility (see ANNEX B).

Independent evaluations of the submitted proposals will be performed, in order to select the Extensions that will be supported under the ORCA project. It is required that each Extension is performed by a single organization.

Benefits to participate in this Open Call are:

- Possibility to gain detailed knowledge on advanced SDR platforms supported under the ORCA project and to extend these platforms with more advanced data plane and control plane functionalities.
- The simplified application process compared to the one from the standard H2020 calls together with a rapid review process by independent external evaluators;
- An extra benefit is the dedicated support from skilled ORCA consortium partners. Each proposer should seek a supporting ORCA consortium partner **(the Patron)** that will be in charge of dedicated (advanced) support of the Extension.

Per proposal a budget can be made available up to a maximum of 80 k€ for an Extension. Next to this, an extra budget (on average 4.5 k€/Extension) can be assigned to an ORCA consortium partner acting as the Patron in charge of dedicated (advanced) support of the Extension.

4.1. Scope of Work EXT1: End-to-end slicing support for SDR and SDN

Introduction

Network slices (NSs) are end-to-end logical networks running on top of the same common network infrastructure. They are mutually isolated, with independent control and management, and can be created or modified on demand, enabling the support of multiple vertical industries with diverging requirements regarding latency, scalability, throughput, and reliability [1]. Network slicing can be divided into Radio Access Network (RAN) and Core Network (CN) slicing:

- RAN slicing in this context means the partition and association of radio resources (spectral bandwidth, time, space) to particular RATs, which can be managed and configured independently. Each RAN slice can use specific configuration parameters, e.g. two RAN slices using multi carrier OFDM on different channels and with different modulation and coding schemes (e.g. subcarrier spacing and Cyclic Prefix duration).
- CN slicing refers to the partitioning of the set of possible packet headers in switches, known as flows, into a group of flowspaces that can be managed and routed independently. Each CN slice can have a particular topology and configuration parameters, e.g. two CN slices using different routing rules and queue rates, both accessing the same gateway to the external network through different links.

Although NS is an essential concept of 5G, there is still a need for tools able to interface with both RAN and CN aspects of a mobile network testbed and that enable dynamic instantiation and reconfiguration of slices tailored to fulfil the requirements of different traffic classes. In this Open Call, we seek the development of a framework capable of filling the end-to-end NS instantiation and management gap on a Software Defined Radio (SDR) experimentation testbed and thus provide a comprehensive set of functionalities to the community. In particular, we seek a solution capable of coordinated management of resources in in the wired network utilizing Software Defined Network (SDN) principles, and in the wireless network implemented in SDR platforms

The purpose of this OC is not to design complex algorithms to automate the orchestration of multiple resources, but rather to develop a framework capable to configure a network slice, using and managing both wireless and fixed network resources, abstracting their specificities and exposing control and management functionalities to experimenters through simple commands or APIs, shown as the Slice Controller in Figure 2. It will be the OC partner's role to implement a framework able to meet all the following functional requirements and demonstrate the control and management capabilities of the developed framework through the experimentation scenario described below.

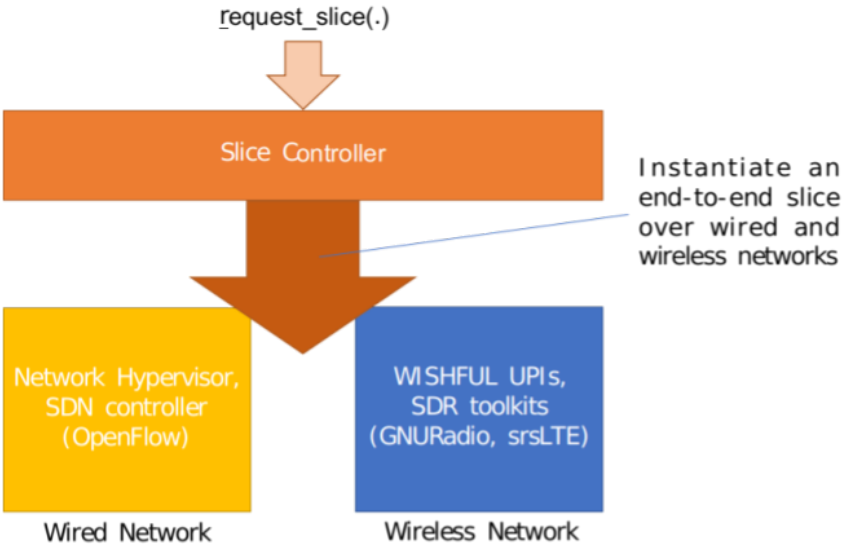

Figure 2: Slice controller handling slicing on wired and wireless networks.

Functional Requirements

The basic functionality provided by the Extension's framework is the instantiation and reconfiguration of NSs using or operating on top of open tools that are widely accepted in the academic and industry communities for both SDN and SDR. In particular, the framework must:

- Partition a SDR's radio resources into smaller non-overlapping radio resource chunks, exposing each of the chunks as virtual RF front-ends that can be used independently. The framework must allow the user to set the center frequency and bandwidth of the

spectrum chunks in case of spectrum resources, or the assignment of time slots in case of time resources

- Interface with SDR platforms (e.g. GNURadio (GR) or srsLTE) through the ORCA control plane to remotely instantiate and run distinct RATs on the radio resource chunks of an SDR node, and then configure those RAT's parameters during the instantiation or run-time through the ORCA control plane interface (which is based on WiSHFUL Unified Programming Interfaces or UPIs [5]).
- Interface with a network hypervisor to remotely instantiate and manage distinct flowspaces, and then configure the flow rules and actions during the instantiation or run-time. Examples of parameters this framework can configure include: creating overlay topologies, modify flow rules and actions (e.g. forwarding, routing, minimum and maximum rates of queues) in a given flowspace. Each flowspace instance, its flow rules and topology running on top of the SDN will be referred to as CN slice.
- Provide a mechanism to associate a given RAN slice with a given CN slice, thus creating an end-to-end NS. The framework must let the experimenter define how a given RAN slice is attached to another given CN slice.
- Expose the list of possible instantiable RAN and CN slices in the form of catalogues, and their respective configurable parameters as descriptor files. These lists/files should be visible to the experimenter from a centralised point-of-control.

Technical Requirements

- **CN level specifications** : Use the necessary APIs to interface with SDN enabled switches (e.g. OpenFlow) and with a network hypervisor (e.g. FlowVisor or FlowN). Configure the network hypervisor to create multiple flowspaces on SDN-enabled switches, and configure a flowspace's topology, flow rules and actions.
- **RAN level specifications**: Use the ORCA control interface to control SDR devices (e.g. Ettus USRP or Xilinx Zynq) Partition the SDR's radio resources into non-overlapping radio resource chunks using a technique similar to HyDRA [2] or SVL [3] for host-controlled spectrum slicing or using a technique as demonstrated in [4] for FPGA-controlled resource slicing. Use the partition mechanism to create multiple radio resource chunks on the SDR devices, instantiate the radio operation mode within each radio resource chunk, and modify the controllable parameters for each operation mode.
- **Slice controller**: Receive slice requests (user input) and translate these requests in control messages with parameter values and commands to manage RAN and CN slices. The messages must be in encoded either in YAML, XML or JSON format. The control and management of RAN and CN slices needs to be decoupled into seprate SDN controller and SDR radio resource resource controller entities. The RAN slice should be oblivious of the CN slice it is associated to and vice-versa. The SDN controller must not be aware of wireless medium and RAT parameters (e.g. RF centre frequency, frequency scheduling algorithms) that are controlled at the RAN level. NS configurations that encompass both RAN and CN domains should be handled by sending control messages to the RAN and CN slices separately.

Validation Scenario

The framework's capabilities for SDR-SDN slicing support needs to be validated for RAN and CN slicing and reconfiguration, as illustrated in Figure 3. The figure shows how the capabilities map to the requirements described earlier. A physical testbed infrastructure is composed by (at least) two SDRs connected to a host computer each, and multiple SDN switches. There are two NSs (comprising both the RAN and CN parts) illustrated in red and green. At an initial stage, the two instantiated NSs utilize distinct SDR nodes with RF front-ends and digital baseband processes (either running a host or on FPGA) to provide two different types of telecommunication services. To reach the second stage, the framework will have to allow making the following reconfigurations remotely:

- provide multiple RAN slices using the same RF front-end and host/FPGA, and adapt their respective radio resources (spectral bandwidth, time slots)
- adjust the re-routing at the CN level to accommodate the instantiation of RAN slices in new nodes

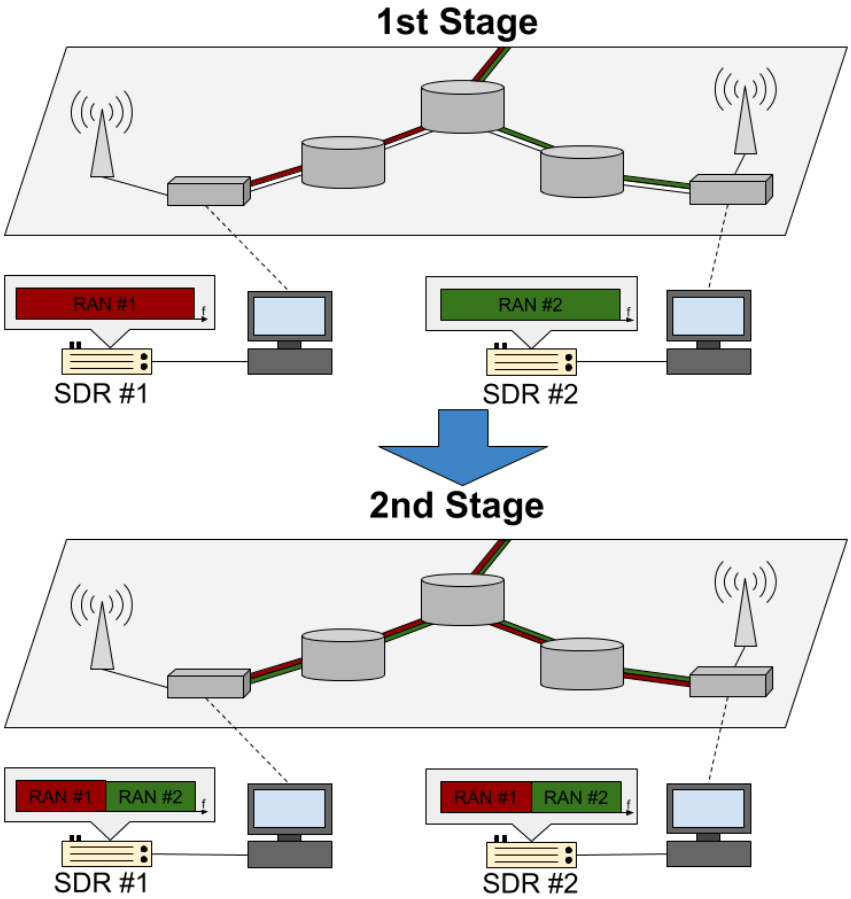

Figure 3: RAN and CN slicing and reconfiguration.

Contact Person

Francisco Paisana (paisanaf@tcd.ie)

References

1. 3rd Generation Partnership Project, “3GPP TR 28.801: Study on management and orchestration of network slicing for next generation network,” 3rd Generation Partnership Project, Tech. Rep., May 2017.
2. M. Kist et al., “HyDRA: A Hypervisor for Software Defined Radios to Enable Radio Virtualization in Mobile Networks”, InfoCom 2017.
3. Tan, Kun, et al. "Spectrum virtualization layer." Microsoft Research, Tech. Rep. MSR-TR-2011-108 (2011).
4. Xianjun Jiao, Ingrid Moerman, Wei Liu, and Felipe Augusto Pereira de Figueiredo, “Radio hardware virtualization for coping with dynamic heterogeneous wireless environments”, CROWNCOM 2017
5. WiSHFUL Unified Programming Interfaces, https://wishful-project.github.io/wishful_upis/

4.2. Scope of Work EXT2: LBT functionality on FPGA as an IP core

Introduction

Mobile operators are urging LTE technology to run in the unlicensed spectrum, including both 2.4 GHz and 5 GHz ISM bands. The fact that LTE is designed for continuous streaming makes it a threat to almost all existing technologies operating in the ISM bands, such as Bluetooth, ZigBee, WiFi and cordless phone. In particular, the coexistence of LTE with WiFi triggered widespread interests. The 3GPP Rel.13 defines Listen Before Talk (LBT) in License Assisted Access of LTE (LTE LAA), which is a mean to protect fair spectrum sharing. There exist several LTE implementations for Software-Defined Radio, though they mostly rely on host computers for signal processing. This is because latency is not an issue for conventional LTE operation, as scheduling and retransmissions only happen in the order of milliseconds. However, LBT requires low latency channel assessment and access (in the order of tens of microseconds), it is evident that host computer based LBT implementation is not an option. In this Extension, we expect the delivery of a generic IP core for LBT implementation inside the FPGA, as an enabler for experimental LBT studies in the research community.

Functional requirements

Functional requirements: A high-level block diagram of the IP core is sketched in Figure 4. The basic functionality of LBT module is storing baseband Tx IQ samples, and discovering the right opportunity to transmit it. Components are explained as follows:

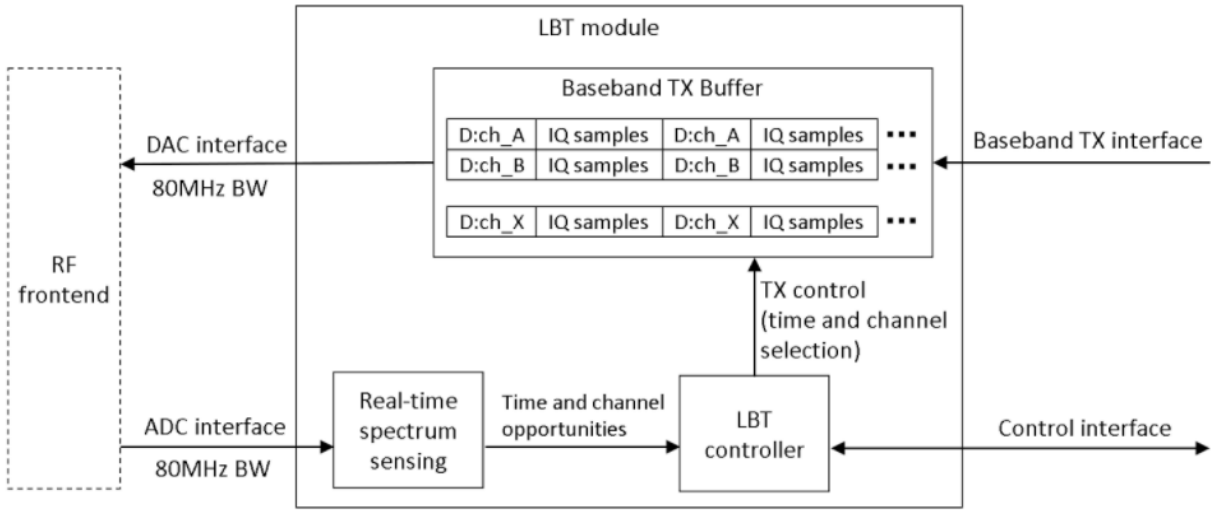

Figure 4 Functional requirements of LBT extension as an FPGA IP core

- A **baseband Tx** buffer to store incoming IQ samples from 'Baseband Tx interface'. Baseband IQ samples are stored in the unit of 'blocks'. Note that a block of IQ sample here is not related to transmit block in LTE, it is a generic unit. A descriptor is associated with each block to describe parameters such as duration, central frequency (channel), etc.
- A **DAC interface** to transmit baseband IQ samples to RF frontend.
- An **ADC interface** to feed IQ samples from RF frontend to real-time spectrum sensing module.
- A **real-time spectrum-sensing module** to assess time and/or frequency domain availability of the medium, and report the condition to LBT controller module. There is no specific limitation on the employed sensing techniques, though the support of energy detection is a must.
- An **LBT controller** should be foreseen to (i) take baseband Tx action (e.g., select the block of IQ samples to transmit on the available channel) based on real-time spectrum sensing result, and (ii) configurations of parameters including but not limited to energy detection threshold, frequency resolution and span of the spectrum sensing module, received via the 'Control interface' to configure the LBT module's runtime behavior.

Technical requirements

Module	**Requirements**
Baseband Tx Buffer	It is recommended to use DMA with AXI (Advanced eXtensible Interface) stream interface. The size and speed of this interface should to be sufficient to ensure the on time of a LTE transmission burst, [2,3,8,10] ms, as specified in [1]
Control Interface	Control interface should use configuration register bank. Register access latency should be less than 0.5μs.
DAC/ADC Interface	It should support minimum complex sampling rate of 4x23.04 Msps.
Spectrum Sensing Module	The monitored total spectrum bandwidth should be configurable, and it should be able to cover 4x23.04 MHz. It should be delivered as a white box, support of energy detection is obligated [2]

Validation scenario

Two types of validations are required, validation on different hardware platforms, and validation on the performance of the IP core itself, details see below. As LBT functionality should be validated in combination with certain PHY, which is not included in this Extension, we recommend using an existing PHY implementation in the host environment (such as srsLTE [3]) to complete the validation scenarios.

- Validation on hardware platforms:
    - It should be demonstrated that the IP core can be integrated with the RFNoC framework [4] and run successfully on USRP X3XX device.
    - It should be demonstrated that the IP core can be integrated into Analog Device Reference Design [5] and run successfully on Xilinx ZYNQ platform in combination with any FMCOMM radio frontend
- Validation on the performance:
    - It should be demonstrated that the IP core satisfies the 3GPP LBT functional tests, as specified in [2]
    - It should be demonstrated that the IP core satisfies the 3GPP multi-node tests, as specified in [6]

Contact person

Wei Liu (wei.liu@imec.be)

References

1. 3GPP, “TR 36. 213 Evolved Universal Terrestrial Radio Access (E-UTRA) Physical layer procedures”, Release 13, 2016-05
2. 3GPP, “TR 36.141 Evolved Universal Terrestrial Radio Access (E-UTRA) Base Station (BS) conformance testing”, Release 13, 2016-01
3. srsLTE https://github.com/srsLTE/srsLTE, online, last accessed on 7th Sept. 2017
4. RFNoC https://www.ettus.com/sdr-software/detail/rf-network-on-chip, online, last accessed on 7th Sept. 2017
5. Analog Device, AD 9361 HDL Reference Design, https://wiki.analog.com/resources/eval/user-guides/ad-fmcomms2-ebz/reference_hdl, online, last accessed on 7th Sept. 2017
6. 3GPP, “TR 36.789 Technical Specification Group Radio Access Network; Evolved Universal Terrestrial Radio Access (E-UTRA); Multi-node tests for Licence-Assisted Access (LAA)”, Release 13, 2017-06

4.3. Scope of Work EXT3: RAT interworking on NS-3 based SDR Prototyping Platform

Introduction

In ORCA, an NS-3 [1] based prototyping platform for RAT interworking technics will be established [2]. For LTE-WiFi/WLAN interworking scenarios four different options are identified (see also Figure 5).

1. TCP level: Multi-path TCP (MPTCP)
2. IP level: LTE/WLAN Radio Level Integration (LWIP)
3. LTE PDCP level: LTE-WLAN Radio Aggregation (LWA)
4. PHY level: LTE-License Assisted Access or LTE-Unlicensed (LAA/LTU-U)

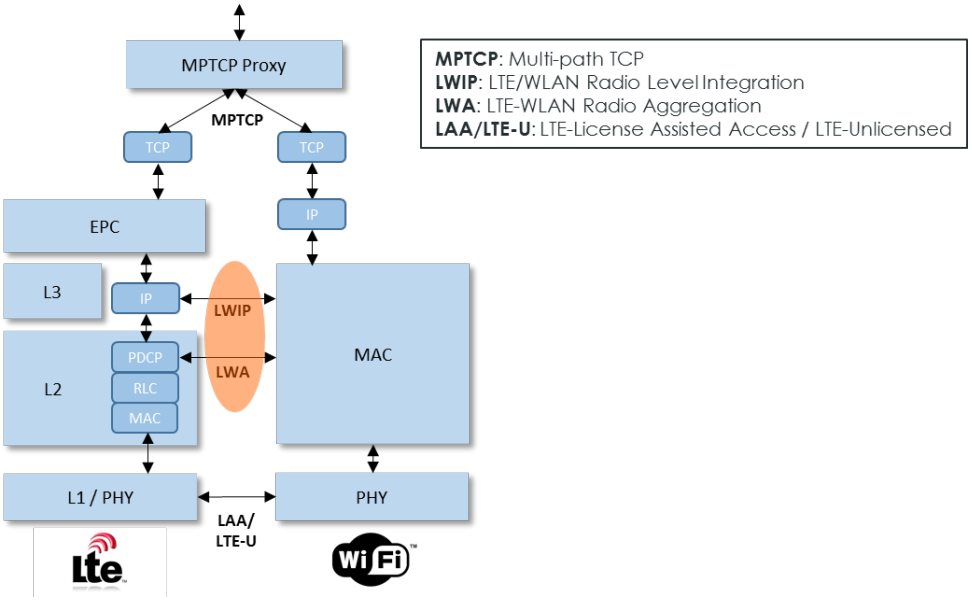

Figure 5: LTE/WiFi interworking options

Since MPTCP and LAA is already covered by the current NS-3 development and implementation, we propose to extend the NS-3 network simulator towards **LWIP** and/or **LWA** in order to complete the LTE/WiFi interworking options that enable better tests and results to understand the tradeoffs between these solutions.

Functional Requirements

LWA and LWIP are two types of LTE-WLAN integration architectures, which are defined in 3GPP Release 13 [3]. Figure 6 shows the protocol stacks of these architectures:

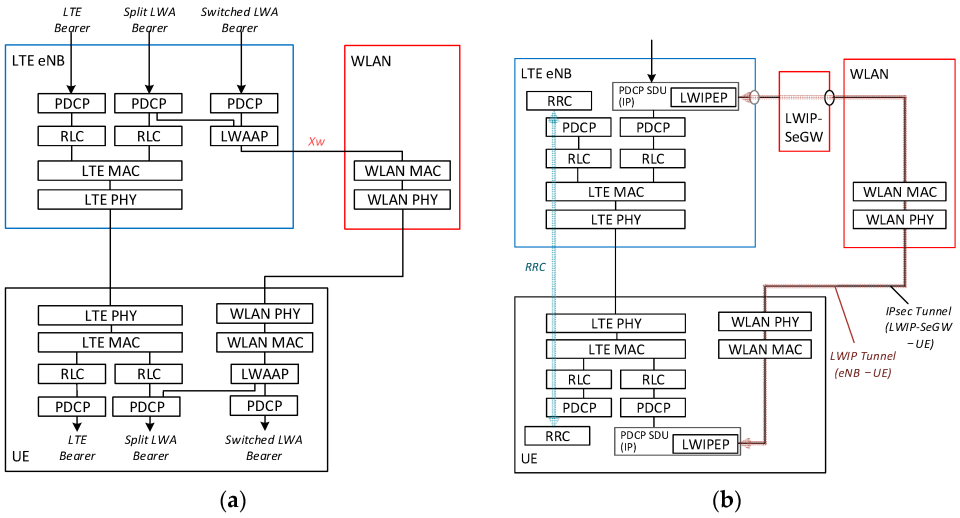

Figure 6: LTE-WLAN interworking architectures in 3GPP Rel.13: (a) LWA in a non-collocated scenario and (b) LWIP ***Error! Reference source not found.****.*

LWA

Similar to the LTE 3GPP Rel. 13 [3] feature of Dual Connectivity in LWA the system aggregates packets between LTE and WLAN on PDCP level. To utilize LTE and WLAN simultaneously **split and switched bearers** are supported. The **PDCP PDU** packets sent via WLAN are encapsulated in LWA Adaptation Protocol (**LWAAP**) which carries bearer identity. The WLAN AP only interacts with the LTE eNB and there is no interaction with LTE core network required. This LWA Extension focuses on the non-collocated deployment scenario where WLAN AP is connected via the **Xw interface**. WLAN mobility and security aspects are not focus of this Extension and could be simplified. For the LTE-WLAN Aggregation Operation the WLAN Termination (WT) Addition and Release procedures shall be considered. More detailed functional description can be found in 3GPP TS 36.300 V13.8.0, section 22A.1 [3].

LWIP

In LWIP the **PDCP SDU** packets are sent from the LTE enB to the LTE UE via WLAN using an IPSec tunnel. The WLAN is hidden to the LTE core network (Except for WLAN authentication). In general DL and UL are support via LWIP but without re-ordering functionality. For the LTE DL of a data bearer, at the LTE UE the packets received from the **IPsec tunnel** are forwarded directly to upper layers. For the UL, the bearer packets sent over the **LWIP tunnel** are encapsulated using **LWIPEP** as specified in 3GPP TS 36.361. WLAN mobility and security aspects are not focus of this Extension and could be simplified. More detailed functional description can be found in 3GPP TS 36.300 V13.8.0, section 22A.3 [3].

Technical Requirements / Platform Requirements

Following technical and platform requirements are defined for this Extension:

- Architecture and interfaces as defined in 3GPP Rel.13 [3]

- Target development platform: NS-3 Network Simulator [5] running on Linux RT [6]
- Integration towards SDR platform (e.g. NI FPGA SDR [7] [8] [9], OpenAirInterface [11] or SRS [12]) using a generic PHY-MAC API (e.g. NI L1-L2 API [10] or FAPI [13])

Validation Scenario

Show LWA and/or LWIP functionality as defined in 3GPP Rel.13 by aggregating two data streams on a UE one from LTE eNB and one from WLAN AP:

- Using the NS-3 Network Simulator in real-time mode
- Using the NS-3 Network Simulator + SDR platform (e.g. NI FPGA [7], [8], [9] SDR) using NI L1-L2 API [10]

Contact person

- Clemens Felber (clemens.felber@ni.com)

References

1. NS-3 Project, "ns-3 Tutorial, Release ns-3.26", https://www.nsnam.org/docs/release/3.26/tutorial/ns-3-tutorial.pdf, March 14, 2017
2. ORCA project, "Coordination strategies between multiple RATs (LTE/802.11/5G-NR)", https://orca-project.eu/wp-content/uploads/sites/4/2017/09/ORCA_2.2-19_v1.3.pdf , September 2017
3. 3GPP, Release 13 – 36.Series Specifications, http://www.3gpp.org/ftp/Specs/latest/Rel-13/36_series/
4. Shozo Okasaka, Richard J. Weiler, Wilhelm Keusgen, Andrey Pudeyev, Alexander Maltsev, Ingolf Karls and Kei Sakaguchi, "Proof-of-Concept of a Millimeter-Wave Integrated Heterogeneous Network for 5G Cellular", http://www.mdpi.com/1424-8220/16/9/1362/htm, Sensors 2016
5. NS-3 Project, "Overview - What is NS-3", Website, https://www.nsnam.org/overview/what-is-ns-3/
6. National Instruments, "NI Linux Real-Time PXI Controller for LabVIEW Communications", Product Website, http://www.ni.com/en-us/shop/select/pxi-controller , March 2017.
7. National Instruments, "LabVIEW Communications 802.11 Application Framework 2.0 and 2.0.1", White Paper, http://www.ni.com/white-paper/53279/en/ , December 2016.
8. National Instruments, "LabVIEW Communications LTE Application Framework 2.0 and 2.0.1", White Paper, http://www.ni.com/white-paper/53286/en/ , December 2016.
9. National Instruments, "LabVIEW System Design Software", Product Website, http://www.ni.com/labview/ , March 2017.
10. ORCA project, "Proposal for a generic PHY and MAC API of multi-RATs", https://orca-project.eu/wp-content/uploads/sites/4/2017/09/ORCA_2.2-08-v1.1.pdf , September 2017
11. OpenAirInterface, Website, https://www.openairinterface.org, September 2017
12. Software Radio Systems, Website, http://www.softwareradiosystems.com, September 2017
13. Small Cell Forum, "nFAPI and FAPI specifications", http://www.scf.io/en/documents/082_-_nFAPI_and_FAPI_specifications.php, May 2017

4.4. Scope of Work EXT4: Digital self-interference cancellation for in-Band Full Duplex

Introduction

Most wireless technologies nowadays use the wireless spectrum below 6GHz. This creates congestion problems when many devices are present in the same area. Although some technologies are already moving to higher frequencies, most technologies will continue using the sub-6GHz for the coming years. Optimizing the efficiency of these technologies is therefore crucial in avoiding congestions and the subsequent problems such as low throughput, high latency and high-energy consumption.

In-band full duplex (IBFD) is one of the promising technologies to make wireless communication more efficient. It allows a wireless device to simultaneously use its transmitter and receiver on the same frequency. This enables the device to either send and receive data simultaneously or send data and check for collisions or interference. Both schemes will improve performance, as simultaneous transmissions double the throughput [1], while detecting collisions decreases the collision time and therefore increase throughput and decreases the energy consumption [2].

Enabling in-band full duplex requires wireless devices to cancel their self-transmitted signal, called the self-interference. The digital representation of this signal is known, however after going through all the analog stages in the transceiver it becomes distorted and therefore it cannot be simple subtracted. To fully cancel the self-interference, the signal should first be cancelled in the analog/RF domain followed by digital cancellation to cancel it below the noise floor. The current in-band full duplex prototype within ORCA is shown in the figure below (Figure 7). Currently everything except the red part is present. The prototype only uses analog self-interference cancellation by means of an electrical balance duplexer [3]. The electrical balance duplexer balances the impedance from the antenna in order to create an inverse copy of the self-interference signal. This inverse copy destructively interferes with the self-interference signal, achieving a cancellation of at least 50 dB at RF. The duplexer can be tuned in real-time and adapt to changes in the environment.

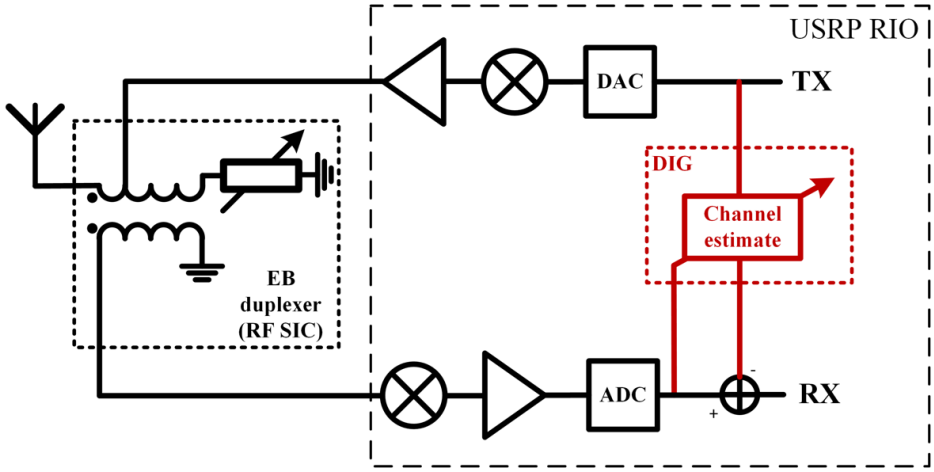

7. In-band full duplex architecture with two self-interference cancellation stages

Our IBFD prototype uses the IEEE 802.15.4 physical (PHY) and medium access control (MAC) layer. The physical layer is currently implemented on the FPGA of a NI USRP RIO using LabVIEW communication Design Suite. The MAC layer is implemented in C and runs inside a Xilinx MicroBlaze which is configured using FPGA fabric. We are currently looking into upgrading the PHY and MAC to the IEEE 802.11p standard for automotive communication.

Functional requirements:

In a typical IBFD system, digital cancellation cleans up any residual self-interference by for example estimating the remaining self-interference and subtracting this from the received samples. The distortions on the remaining self-interference can be both non-linear and linear. Therefore, cancellation technique should take both distortions into account. In the ORCA IBFD prototype, we are aiming at **45-50 dB** of digital cancellation. The algorithm should work on IEEE 802.15.4 signals and/or IEEE 802.11p signals.

Technical requirements:

The digital cancellation module should be implemented in a general form, e.g., VHDL, Verilog and C++, to be importable to conventional software such as LabVIEW communication Design Suite or GNU radio. While the current In-Band Full Duplex prototype is implemented in LabVIEW communication Design Suite software, and runs on a USRP with the IMEC EBD, it is of interest to ORCA to extend the offer towards other software or hardware capable of real-time In-Band Full Duplex. The design should ideally work with both the IEEE 802.15.4 and IEEE 802.11 physical layers and switching between them should be possible at runtime. This module should be able to estimate and cancel any residual self-interference in real-time and with minimum amount of latency.
Moreover, at least **45 dB** should be cancelled in the digital domain enabling true bi-directional in-band full duplex communication.

Validation Scenario:

The functionality and performance of the digital self-interference cancellation system should be validated using IEEE 802.15.4 and IEEE 802.11p wave forms including different modulation schemes and data rates. The validation includes measurements which in addition to the defined operational targets above, clearly illustrate the performance of the implemented module, e.g., depicts the received signal BER and packet loss ratio versus the input signal SNR.

Contact person

Seyed Ali Hassani (seyedali.hassani@kuleuven.be)

REFERENCES

1. Bharadia, Dinesh, Emily McMilin, and Sachin Katti. "Full duplex radios." ACM SIGCOMM Computer Communication Review 43.4 (2013): 375-386.
2. T. Vermeulen, F. Rosas, M. Verhelst and S. Pollin, "Performance analysis of in-band full duplex collision and interference detection in dense networks," 2016 13th IEEE Annual Consumer Communications & Networking Conference (CCNC), Las Vegas, NV, 2016, pp. 595-601.
3. B. van Liempd et al., "A +70-dBm IIP3 Electrical-Balance Duplexer for Highly Integrated Tunable Front-Ends," in IEEE Transactions on Microwave Theory and Techniques, vol. 64, no. 12, pp. 4274-4286, Dec. 2016.

5. RFP process

Proposers must be eligible for participation in H2020 projects. Proposals will only be accepted from a **single party (no consortia are allowed)**.

A proposer can only be selected for funding for one proposal, even if the proposer submits multiple proposals and more than one are ranked high enough to be selected for funding. In the latter case, the proposer might be given the opportunity to choose the one to be retained for funding.

The language in which the proposal must be submitted is English. Proposals written in any other language will be automatically rejected.

Each proposing party should seek contact with the ORCA consortium and identify an ORCA partner acting as “Patron”. The role of the Patron is to carry out an obligatory feasibility and relevance check and to provide support during the execution of the Extension. This Patron will also be consulted for evaluation before payment by imec of the invoices. The role of the Patron is further described in Section 7.

5.1. Proposal Template

The use of a specific proposal format as described in this section is mandatory. The template is limited in size and is focusing on “what the proposer wants to do” and “what the expected result is”.
Following, a short description of all the proposal template sections:

Section A **Summary** (maximum 300 words).
The information in this section may be used in public documents and reports by the ORCA consortium.

Section B **Detailed description and expected results** (minimum 4 pages, and maximum 8 pages)
This section describes the details on the planned Extension (what does the proposer hope to obtain?, how?, why is it relevant?). This section should also include all information with respect to the State-of-the-Art.

Section C **Requested ORCA software tools, radio hardware platforms, testbeds** (target length 1 page)
The information in this section needs to be collected in collaboration with the ORCA partner acting as Patron on this Extension. For this section, a specific format needs to be used, which is included in the proposal template.

Section D **Feasibility and relevance check** (max. 1 page)
This section contains the feedback from the ORCA partner acting as Patron on this Extension. Each proposing party must contact the ORCA consortium regarding its submission to identify a possible Patron. This Patron can be the ORCA partner responsible for the testbed, hardware or software tools the proposer will use or extend. The proposing party must submit its draft proposal to this Patron by the 8th of November 2017 (see Section 5.3). The feedback by the Patron is copied into this section of the proposal.

Section E **Background and qualifications** (maximum 2 pages)
This section describes the proposer and includes an overview of the activities, the proposer’s qualifications, technical expertise and other information to allow the reviewers to judge the proposer’s ability to carry out the Extension.

Section F **Expected feedback to ORCA Consortium** (1 page)

This section contains valuable information for the ORCA consortium and should indicate the expected feedback the ORCA consortium can expect from the use of its software tools, hardware platforms and/or testbeds after carrying out the Extension. This information is essential in view of the further improving the usability of the ORCA facility.

Section G **Requested funding** (1 page)

This section provides an overview of the budgeted costs and the requested funding. A split is made in personnel costs, other direct costs (travel, consumables, etc.) and indirect costs.

Section H **Use of proposal information**

In this section the proposing party is asked to include some statements related to sharing information of his proposal with the EC and the ORCA consortium.

Proposals are treated in a confidential way, meaning that only successful proposals must be disclosed to the ORCA consortium. Open calls previously organized by other projects were very successful and have revealed that many submitted non-granted proposals also contain very interesting and valuable information that could be used for setting up collaborations or to extract ideas for further improving the ORCA facility. Therefore, the ORCA project would like to have the opportunity to collect more detailed information and further use this information, also if the proposal is not selected for funding. In any case, the ORCA consortium will treat all information of a proposal confidentially.

The full proposal template can be found in Annex A to this document.

Please note that **in the draft proposal** that will be submitted for feasibility and relevance check, **at least sections A, B and C should be fully completed**. Please be aware that the Patron will NOT review draft proposals or propose any changes to the proposal. The Patron will only give feedback on the feasibility and the relevance to ORCA of the proposed Extension based on the completed sections A, B and C. The feasibility and relevance check does not provide a commitment that the proposal will be selected.

5.2. Evaluation criteria

Eligibility criteria

Proposals can only be submitted by:

- Parties eligible for funding in the European Horizon 2020 Programme;
- Single party (no consortia are allowed);
- Multiple proposals may be submitted by the same party. However, in case multiple proposals are submitted, reference should be made to each submitted proposal and clear indication should be given on the complementarity of the proposals;

Proposal evaluation criteria

Evaluation and ranking will be carried out by an external jury of experts. Each proposal will be evaluated following a 2-dimensional approach:

- ***A functional approach:*** the proposal should add a new and relevant functionality to the ORCA project
- ***A platform approach:*** the proposal submitted should be as general as possible. The Extension should not be restricted to a single SDR platform and a specific software toolset, but should be sufficiently generic to run in multiple SDR platforms using different software toolsets.

Proposals submitted by Parties meeting the eligibility criteria will be further evaluated according to the following criteria:

1. ***Clarity and methodology*** (Cf. Section B of the Proposal Template)

   The Extension should be scientifically and/or technically sound. There should be a clear problem statement, a solid Extension design, a good methodology, etc.

2. ***Feasibility and relevance*** (Cf. Sections C and D of the Proposal Template)

   Extensions with low relevance for ORCA, with low chances for success or requiring excessive support from the ORCA partners will get a lower score.

3. ***Qualifications of the proposer*** (Cf. Section E of the Proposal Template)

   The proposer should exhibit prior research/development experience and the necessary qualifications to perform the Extension.

4. ***Value for money*** (Cf. Section G of the Proposal Template)

The requested budget should be in line with the proposed work plan.

5. ***Degree of functional innovation*** (Cf. Section B of the Proposal Template).

   The degree of innovation of the Extension. The score should reflect the potential of the Extension to enrich the SDR functionality of the ORCA facility. If an Extension is pushing the boundaries of its domain, then it should get a higher score than an Extension just implementing trivial things. In order to demonstrate this criterion, the proposer is expected to clearly motivate his/her Extension and indicate the State of the Art in the appropriate field.

6. ***Degree of platform independence*** (Cf. Section B of the Proposal Template).

   The degree the Extension is agnostic to SDR hardware platforms and software toolsets supported in the ORCA project. An Extension that is supported by more SDR hardware platforms and software toolsets will get a higher score. Extensions only addressing a single SDR hardware platform and a single software toolset will obtain a score below the threshold for funding.

7. **Scientific/industrial impact** (cf. Section B of the proposal template)

   Potential for take-up of the results by the broader scientific/industrial community

   The proposed Extension should be sufficiently relevant form a scientific/industrial point of view to be taken up by the broader scientific/industrial community. The score given here should reflect the extent to which the broader scientific/industrial community can benefit from the solution proposed in the Extension. The score should reflect the potential of the Extension to be used by future wireless experimenters in subsequent (funded) ORCA open calls or by (non-funded) open access of ORCA facilities and software platforms.

8. **Demonstration potential** (cf. Section B of the proposal template)

   The expected results of the Extension should have potential for demonstration of the results on relevant events (exhibitions, congresses, technical seminars, networking events, user group events, etc.). The proposer is expected to identify relevant demonstration opportunities.

9. ***Potential for Feedback*** (Cf. Section F of the Proposal Template)

   The ORCA consortium is seeking feedback regarding the use of the ORCA facility. Proposals that can indicate a lot of information and feedback on the use of SDR hardware platforms, software tools and testbeds will get a higher score.

Criterion	Short description	Weight	Maximum score
1	Clarity and methodology	1	5
2	Feasibility	1	5
3	Qualifications of the proposer	1	5
5	Value for money	1	5
7	Degree of functional innovation	2	10
8	Degree of platform independence	2	10
9	Scientific/industrial impact	2	10
10	Demonstration potential	1	5
11	Potential for feedback	1	5
		Maximum Total score	**60**

Orca aims at selecting 4 proposals. Possibly one for each of the topics listed in Section 4.
For the final selection of proposals for Extensions, at first the highest ranked proposal (that exceeds all threshold criteria) for each topic will be selected. If after that, there is still budget left, the highest ranked proposal(s) not selected so far will be selected, no matter which topic. In this case, the proposers will be asked whether they are willing to implement the extension using as funds the budget left (which might be lower than the budget initial requested in the proposal).

5.3. Submission Information

The proposal must be:

- Submitted on-line through: https://www.orca-project.eu/open-calls/1st-orca-open-call-extension/
- Submitted in English

A **technical feasibility and relevance check** is required before submission. This feasibility and relevance check will be carried out by the ORCA members responsible for the facilities, radio hardware platforms, and software platforms involved. As a result of this, an additional concise section is added to the proposal (Section D of the Proposal Template) and is provided in collaboration with the ORCA project consortium members. This section also identifies the Patron of the Extension, who is the lead contact person within the project who will be responsible for the follow up of this Extension (see Section 7 of this document).

Once the deadline for submitting a proposal is reached, the call will be closed and the evaluation process will start. The duration of the evaluation of the proposals and approval by the EU will be kept within 1 month.
In case of this specific Call, the target date for acknowledgement of selection is set around middle of December 2017.
The outcome of the evaluation will be communicated to the proposers via email as soon as the process is completed. The notification will include a detailed report of the evaluation process where for each criterion the score and the motivation of the evaluators will be reported.

Selected extensions can start at the earliest on the 2nd of January 2017, but no later than 1st of February 2018.
The deadline for the final report for an Extension is expected 9 months after the start of the Extension, and no later than the end of October 2018. Please note that a later start may imply a shorter (than 9 months) Extension.
The final evaluation of the Extensions will happen at a review meeting with the EC. The review meeting for Extensions is currently scheduled for November-December 2018 at the imec premises in Ghent. The exact date will be fixed during the execution of the Extension.

Submission deadline of draft proposal to the ORCA partner acting as Patron for Feasibility and Relevance check:	Wednesday the 8th November 2017, at 17:00 Brussels local time
Submission deadline:	Wednesday the 15th November 2017, at 17:00 Brussels local time
Notification of the result:	Mid December 2017
Start of the Extension:	Tuesday the 2nd of January 2018
End of the Extension:	Monday the 31st of October 2018

Once the outcome of the Open Call is announced the winners are expected to perform the following tasks and phases:

- Provide a detailed design of the extension for revision and approval to ORCA consortium
- Implementation of the proposed extension
- Provide a validation/test plan followed by approval by ORCA consortium
- Submit Reporting and documentation to the ORCA consortium for approval. Details about Reporting can be found in Section 6.2.

Please note that some of these phases can be reiterative.

6. Terms & conditions

Once a proposer is selected to perform the proposed Extension, the proposer will become a third party receiving financial support using Cascade Funding, and to this end needs to sign an Agreement with IMEC. In the remainder of this document a 'third party using Cascade Funding' is referred to as 'Third Party'.
The administrative load for the Third Party will be minimal as only two invoices need to be submitted to IMEC upon completion of the Extension together with a final report describing the tasks performed and the results achieved. The final report needs to be accompanied with the code of the Extension, together with the documentation on the use of the Extension. This final report, source code and documentation will be required before payment will be carried out. A payment of up to 75% of the requested funding will be carried out by IMEC based on the evaluation of the final report, source code, documentation and signature of the Agreement detailed in Annex B The remaining 25% will be paid following a formal approval of the report and the work at a technical project review by the European Commission (EC). More details on the payment scheme are given in Section 7.1.
The template of the Agreement that the winning proposer will be asked to sign is attached to this document as Annex B.
By submitting a proposal for Extension, the proposer confirms that he is aware of the terms and conditions in the aforementioned agreement and that he/she implicitly agrees to them.

6.1. Support of Extension and role of Patron

Successful proposers in this open call have access to basic and advanced support:

1. **Basic support**
    - Guaranteeing that the ORCA facility is up and running (e.g. answering/solving "Why can I not reach SDR node X?")

- Providing pointers to documentation on how the ORCA facility and software toolsets can be used (e.g. "how to use a specific SDR platform in one of the ORCA testbeds" => answer: check out our tutorial online at page x")
- Providing pointers to technical questions as far as relevant (e.g. answering "do you know how I could access a certain functionality of a SDR device" => answer: yes, it is described on following page: y"; irrelevant questions are for example "how to copy a directory under Linux")

2. **Dedicated (advanced) support** includes all of the following supporting activities by the Patron:
   - Deeper study of the problem: invest effort to fully understand what the proposer's goals are, suggest (alternative) ways to reach the proposer's goals. To put it more concretely, proposers do not need to know all details of a specific testbed or how it should be used, they will be told what is relevant to them and can focus on their problem, not on how to solve a testbed problem.
   - Help with setting up the Extensions (e.g. "how to use a specific testbed " => answer: the tutorial is there, but let me show you what is relevant for you, let me sit together with you while going through this example and let us then also make (together) a description for the Extension that matches what you are trying to do).
   - (Joint) solving of practical technical problems (e.g. "do you know how I could change a certain functionality on a specific SDR node " => yes, it is described on page y, in your case you could implement this as follows.., perhaps we should quickly make a script that helps you to do it more easily, ...)
   - Technical consultancy during or after the Extension (e.g. "I do get result X, but would have expected Y, what could be the problem?")

It is essential that the proposer gets in contact with the ORCA partner in charge of the testbed(s) and/or software toolset(s) that will be used for the Extension to discuss the Extension itself and the specific requirements. For each topic of Extension an appropriate Patron has been identified. However, additional technical information may be required on specific SDR hardware platforms, software toolsets and testbeds, that cannot be provided by the Patron. A list of possible contact persons is therefore given below:

Partner	Contact	Supported Testbeds, HW and SW
IMEC	Wei Liu Wei.liu@imec.be	Testbeds: w.iLab.t, Portable testbed
		SDR HW: USRP2-N210, USRP B200mini, ZedBoard Xilinx Zynq®-7000 SoC, Xilinx ZC706 Evaluation Kit - Zynq® SoC, USRP X310, NI USRP-2943R
		SW: Xilinx Vivado Design Suite v2016.2 and

		Analog Device AD9361 HDL Reference Design[3], Xilinx Vivado Design Suite v2015.4 for RFNoC related development, SrsLTE, TAISC[4], GITAR[5]
TCD	Francisco Paisana paisanaf@tcd.ie	Testbed: IRIS
		SDR HW: USRP2-N210, USRP2-N210 w/ beamforming, USRP X310
		SW: GNU Radio, IRIS software radio, srsLTE
RUTGERS	Ivan Seskar seskar@winlab.rutgers.edu	Testbeds: ORBIT
		SDR HW: USRP2-N210, USRP X310, USRP B210, Nutaq PicoSDR2x2-E, Nutaq ZeptoSDR, RTL-SDR
		SW: GNU Radio, RFNoC, SrsLTE, OAI
KU Leuven	Seyed Ali Hassani seyedali.hassani@kuleuven.be	Testbed: KU Leuven
		SDR HW: Full Duplex: NI USRP-2952R, NI USRP-2943R Massive MIMO: NI USRP-2942R (34), NI USRP-2943R (2), NI USRP-2952R (8), NI USRP-2921 (2)
		SW: Full Duplex: NI LabVIEW Massive MIMO: NI LabVIEW
TUD	Martin Danneberg martin.danneberg@ifn.et.tu-dresden.de	Testbed: TUD macro scale testbed
		SDR HW: NI PXI 5791, NI USRP 2920, NI USRP RIO 2953R, NI mmWave
		SW: NI LabVIEW Communications System Design Suite based GFDM flexible transmitter
NI	Clemens Felber clemens.felber@ni.com	SW: LabVIEW Communications LTE Application Framework, LabVIEW Communications 802.11 Application Framework, NI L1-L2 API, ns-3 network simulator (LTE + WiFi module)

6.2. Reporting

As the selected proposers Third Party in the ORCA project, no input will be required for any of the regular project reports (ORCA deliverables), which the ORCA consortium needs to submit to the EC.

[3] https://wiki.analog.com/resources/eval/user-guides/ad-fmcomms2-ebz/reference_hdl
[4] http://www.wishful-project.eu/taisc
[5] http://www.wishful-project.eu/gitar

The Third Party only has to submit a final report after completion of the Extension. A specific template needs to be used and will include:

Part A. ***Summary***

Part B. ***Detailed description***

This section describes the details on the Extension
It includes:

- B.1 Concept, Objectives, Set-up and Background
- B.2 Extension Functionality Validation
- B.3 Impact

Part C. ***Feedback to ORCA***

This section contains valuable information for the ORCA consortium and describes the Third Party's experiences while performing the Extension starting from the available testbeds, SDR platforms and software toolsets. It includes:

- C.1 Testbeds/Hardware/Software Resources used
- C.2 Feedback on getting acquainted/using/extending the testbeds, SDR platforms and software toolsets offered in ORCA
- C.3 Feedback on the administration process of your proposal, Patron communication, and support received from the consortium
- C.4 Why ORCA was useful?
- C.5 Other feedback
- C.6 Quote

Part D. ***Leaflet***

This section provides information that can be used to make a leaflet/poster of your Extension for promotional purposes

This report will not only serve as an evaluation tool to judge payment of the Third Party, but will also serve as:

- input to the evaluation of the user-friendliness of the ORCA testbeds, SDR hardware platforms and toolsets, and
- identification of missing gaps in both testbeds and software toolsets.

Part of this report may be used by the ORCA consortium for inclusion in their reporting documents to the EC and in public presentations. Inclusion of confidential information should therefore be indicated and discussed with the ORCA consortium. The code of the Extension,

together with the documentation on the use of the Extension, must be posted on the ORCA project website and/or other ORCA code repository.

This report will also be used for the formal review by the European Commission. Each Third Party is expected to attend this formal review meeting with the EC. In exceptional cases (to be motivated by the Third Party), the Third Party can be represented by his Patron.
The template for the final report will be made available during the execution of the Extension.

7. Financial information

For this first round of Open Calls for Extension the available total budget is 300 k€ and per each proposal a budget can be made available up to a maximum of 80 k€ for an extension. The target is to fund one Extension proposal per topic.

7.1. Payment Scheme

As the selected proposers will be linked to the ORCA consortium as Third party, specific arrangements exist with respect to financial costs and payment schemes.

As a Third Party, the proposing party needs to include an overview of the estimated costs in its proposal at the time of submission. Costs consist of personnel costs, direct costs (such as travel, consumables, etc.) and indirect costs. The costs of a Third Party have to comply with the rules and the principles mentioned in Section I, Article 6 (Eligible and ineligible costs) of the H2020 AGA — Annotated Model Grant Agreement (see http://ec.europa.eu/research/participants/data/ref/h2020/grants_manual/amga/h2020-amga_en.pdf), in the same way as the beneficiaries, and must be recorded in the accounts of the Third Party. In other words, the rules relating to eligibility of costs, identification of direct and indirect costs and upper funding limits apply. Equally those concerning controls and audits of Section I, Article 22 of the H2020 AGA.

The maximum requested funding for an Extensions in this Call is set at 80 k€ and the maximum requested funding for the ORCA partner acting as the Patron for an Extension is limited to 4.5 k€ euro on average. Costs in this case are related to the provision of dedicated (advanced) support.

As a Third Party, the selected parties for Extensions need to submit a report, together with the code and documentation, at the end of the Extension (for this call this will be at the latest end of October 2018, under the assumption that the project starts on 2nd of January 2018). This report (see Section 6.2), must include an overview of the costs incurred and will be accompanied by an invoice to IMEC for 75% of the costs incurred.

The report and the declared costs will be evaluated by the ORCA consortium including the partner acting as Patron.
Based on this evaluation, a payment of up to 75% costs incurred, amounting to maximum 75% of the approved funding, will be carried out by IMEC.
The remaining 25% will be paid following a formal approval of the report and the work at a technical project review by the European Commission (EC). To this end a second invoice needs to be submitted to the project coordinator (imec) for the remaining 25% of the costs incurred.

For Open Call 1, review meetings with the EC are planned in November-December 2018. The exact date will be fixed during the execution of the Extension. The review meeting will be held in Ghent at the imec premises. At the review meeting the results of the Extension need to be presented, preferably through a real-life (remote) demo running in one the ORCA testbeds. Either the Third Party or the Patron has to present the final results. In the latter case, the Patron should be very well informed, as 25% of the payment depends on the formal approval of the work at the review meeting.

- Annex A: Proposal template
- Annex B: Agreement for the integration of an Extension to the ORCA Platform for Experimentation

ANNEX A

Orchestration and Reconfiguration Control Architecture

Open Call 1

First ORCA Competitive Call for Extensions

Full Title of your proposal

Acronym of your proposal (optional)

Call[1] - Identifier[2]	ORCA-OC1-EXTx
Date of preparation of your proposal:	xx/yy/2017
Version number (optional):	
Your organisation name:	name
Name of the coordinating person:	First name Last name
Coordinator telephone number:	number
Coordinator email: [This is the email address to which the Acknowledgment of receipt will be sent]	Email address

Note: Grey highlighted areas need to be filled. Word template can be downloaded from ORCA project website (see https://www.orca-project.eu/open-calls/1st-orca-open-call-extension/)

[1] This call: ORCA-OC1

[2] EXT as 'Extension' followed by the number of the extension topic applying for: EXT1 - SDN-SDR interface; EXT2 - Listen Before Talk (LBT); EXT3 - NS-3 based Prototyping Platform; EXT4 – Inband Full-Duplex.

Section A Project Summary

(Maximum 300 words – summary of the proposed work)

Remark: The information in this section may be used in public documents and reports by the ORCA consortium.

This section needs to be completed in the draft proposal and will be used for the feasibility check (cf. Section D)

Section B Detailed description and expected results

(minimum 4 pages, and maximum 8 pages)

This section describes the details on the planned Experiment (what does the proposer hope to obtain?, how?, why is it relevant?). This section should also include all information with respect to the State-of-the-Art and the expected scientific or business impact.

This section needs to be completed in the draft proposal and will be used for the feasibility check (cf. Section D)

B.1. Concept and objectives

Describe the specific objectives of the proposed Extension, which should be clear, measurable, realistic and achievable within the duration of the Extension (not through subsequent development). Show how they relate to the topic(s) addressed by the competitive call and how and why ORCA is needed for realizing them.

Describe and explain the overall concept that forms the basis for your Extension. Describe the main ideas, models or assumptions involved.

B.2. Impact

Describe the potential that the Extension will be used by future wireless experimenters from the broader scientific community as well as developers from industry in subsequent (funded) WiSHFUL open calls or by (non-funded) open access of WiSHFUL facilities and software platforms.

Show that the proposed Extension has sufficient sustainable benefits for the ORCA project, meaning that there should be an added value for the ORCA project, after the proposer has finished his Extension.

B.3. Description of State-of-the-Art

Describe in detail how the Extension will advance existing software, hardware and/or experimental platforms, and to which extent the functionality added by the proposed Extension is different from the functionality that is already available in existing work.

B.4. Methodology and associated work plan

Provide a work plan. Provide clear goals and verifiable results, and also a clear timing. The work plan involves at least the following phases:

1. *Design of Extension*
2. *Implementation the Extension*
3. *Analysis & feedback*
    - *Analysis of the results of the Extension*
    - *Feedback on user experience*
    - *Recommendations for improvements and/or future extensions of ORCA software platforms and testbeds*
4. *Showcase: Set up of a showcase (demonstration) to be used for the evaluation of the Extension at the review meeting with the EC, and for further promotion of ORCA*
5. *Dissemination: Regular dissemination actions (journal publications, conferences, workshops, exhibitions, events, advertising of results at ORCA website, etc.)*
6. *Final report, code and documentation*

NOTE: there is NO need to define work packages or deliverables. All results need to be reported in the final report at the end of the Extension. Of course, a good communication plan with the Patron is required to exchange progress within different phases.

Section C Requested ORCA software platforms, radio hardware platforms and testbeds

(Target length 1 page)

Please check the ORCA testbeds, SDR hardware platforms and software tools that will be required for your Extension.
For more details please visit the open calls page on the ORCA website:

- http://www.orca-project.eu/opencalls

This section needs to be completed in the draft proposal and will be used for the feasibility check (cf. Section D).

TESTBEDS	**Required (Yes/No)**
w.iLab.t testbed for heterogeneous environments (IMEC, Ghent, Belgium)	
IMEC portable testbed (any location)	
IRIS network virtualization testbed (TCD, Dublin, Ireland)	
ORBIT heterogeneous multi-node testbed (Rutgers University, New Jersey, US)	
TUD macro scale testbed (TUD, Dresden, Germany)	
Dense multi-node networks testbed (KU Leuven, Leuven, Belgium)	

SDR HARDWARE PLATFORMS	**Number of nodes required**
Nutaq ZeptoSDR	
Nutaq picoSDR	
PicoZed Xilinx Zynq®-7000 SoC	
USRP B200-mini	
USRP E310	
USRP N210	
USRP X310	
USRP 2920	
USRP 2921	
USRP RIO 2942R	
USRP RIO 2943R	
USRP RIO 2952R (+ GPS)	
USRP RIO 2953R (+ GPS)	
WARPv2	

Xilinx ZC706 Evaluation Kit - Zynq® 7000 SoC + AD FMCOMM radio frontend	
ZedBoard Xilinx Zynq®-7000 SoC	
ZedBoard Xilinx Zynq®-7000 SoC + AD FMCOMM radio frontend	
BB – NI PXI 7975 Module	
BB – NI PXI 7965 Module	
FE – NI PXI 5644	
FE – NI PXI 7976R	

SOFTWARE TOOLS	**Required (Yes/No)**
IRIS Software Radio	
GNU Radio	
NI LabVIEW	
Xilinx Vivado Design Suite v2015.4 for RFNoC related development	
Xilinx Vivado Design Suite v2016.2 and Analog Device AD9361 HDL Reference Design	
NI LabVIEW Full Duplex	
NI LabVIEW Massive MIMO	
NI LabVIEW Communications System Design Suite based GFDM flexible transmitter	
LabVIEW Communications LTE Application Framework	
LabVIEW Communications 802.11 Application Framework	
NI L1-L2 API	
ns-3 network simulator (LTE + WiFi module)	
Time-Annotated Instruction Set Computer (TAISC)	
Generic Internet-of-Things ARchitecture (GITAR)	

Please provide a short motivation on why specific testbeds, hardware platforms and software platforms will be required for the proposed Experiment. (maximum ½ page)

Section D Feasibility and Relevance check

(maximum 1 page)

This section contains the feedback from the ORCA partner acting as Patron on this Extension. Each proposing party must contact the ORCA consortium regarding its submission to identify a possible Patron. This Patron can be the ORCA partner responsible

for the testbed, hardware or software platform the proposer will use during its Extension. The proposing party must submit its draft proposal to this Patron by Wednesday the 8th November 2017, at 17:00 Brussels local time. The feedback by the Patron is copied into this section of the proposal.

Section E Background and qualifications

(maximum 2 pages)

This section describes the proposer and includes an overview of the activities, the proposer's qualifications, technical expertise and other information to allow the reviewers to judge the proposer's ability to carry out the Extension.

Section F Expected feedback to the ORCA Consortium

(maximum 1 page)

This section contains valuable information for the ORCA consortium and should indicate the expected feedback the ORCA consortium can expect from the use of its software tools, hardware platforms and/or testbeds after carrying out the Extension. This information is essential in view of the further improving the usability of the ORCA facility.

Section G Requested funding

(maximum 1 page)

This section provides an overview of the budgeted costs and the requested funding. A split is made in personnel costs, other direct costs (travel, consumables, etc.) and indirect costs. Besides the table below, extra information can be provided to support the requested funding and which may help to judge the cost to the ORCA project.
Please show your figures in euros (not thousands of euros).

	Total PM	**Cost (€)**
(1) Direct personnel costs		
(2) Other direct costs, of which:		
Travel		
Equipment		
Other goods and services		

(3) Indirect costs	
(4) Total costs (Sum of 1, 2 and 3)	

In row (1), insert your direct personnel costs for the work involved.
In row (2), insert any other costs, for example travel or equipment costs. Please allocate sufficient budget for participation at the final review meeting, and visit(s) to ORCA partners, in case this is required in view of advanced support by the Patron.
In row (3), calculate the indirect costs (for personnel and other direct costs)
In row (4), calculate the sum of your personnel, other direct costs and indirect costs.
The maximum funding which is allowed in this call is set at 80 000 € for Extension.
In view of the review of your proposal it is best to list the costs related to the proposed Extension as would be done for any European Project.

Section H Use of proposal information

In this section the proposing party is asked to include some statements related to sharing information of his proposal within the ORCA consortium.
Proposals are treated in a confidential way, meaning that only successful proposals must be disclosed to the ORCA consortium. Open calls previously organized by other projects were very successful and have revealed that many submitted non-granted proposals also contain very interesting and valuable information that could be used for setting up collaborations or to extract ideas for further improving the federated test infrastructures. Therefore the ORCA project would like to have the opportunity to collect more detailed information and further use this information, also if the proposal is not selected for funding. In any case, the ORCA consortium will treat all information of a proposal confidentially.
Two types of information usage are envisaged:

- *Information which is part of the Sections A, C, D and F will be used within the ORCA project as input for tasks related to testbed and software tools optimizations, sustainability studies, etc. The same information can also be used in an anonymous way to create statistics and reports about this first open call. All proposals submitted to this competitive open call are obliged to allow this form of information access and usage.*
- *Other information belonging to this proposal might also be accessed by EC and the ORCA consortium, if allowed by the corresponding proposer. Any use of such information will be discussed and agreed upon with the proposers. Proposers have the freedom to select if they wish to support this kind of information usage.*

I allow that the material provided in Sections A, C, D and F of this proposal may be accessed by the EC and the ORCA consortium, also if the proposal is not selected for funding. In any case, the ORCA consortium will treat all this information confidentially. It will be used within the ORCA project as input for tasks related to testbed and software platform optimizations, sustainability studies, etc. The same information can also be used in an anonymous way to create statistics and reports about this first open call.	Yes ☐

Furthermore, I allow that the other parts of this proposal may be accessed by the EC and the ORCA consortium, also if the proposal is not selected for funding. In any case, the ORCA consortium will treat all information of this proposal confidentially. Any use of this information will be discussed and agreed upon with the proposers.	Yes ☐	No ☐

Appendix 1:

Extension – financial information

Duration of the Agreement:
Start date: xxx
End date: end of the Project (currently 31/12/2019)

Maximum Budget: xxx k€

Payment conditions (subject to payment conditions detailed in article 3.3): (timing of the payment, unless this is included in the open call document)

ANNEX B

Agreement for the integration of an Extension to the ORCA Platform for Experimentation

This Agreement for the addition of an Extension to the ORCA Platform for Experimentation (hereinafter referred to as the "Agreement") is executed by and between:

1. Provider:

[FULL NAME + LEGAL FORM], with its registered office situated at [ADRESS] and hereby duly represented by [NAME+TITLE]

2. Coordinator:

Interuniversitair Micro-Electronica Centrum vzw (IMEC), a non-profit organisation duly organized under the laws of Belgium, Register of Legal Entities Leuven VAT BE 0425.260.668, with its registered office situated at Kapeldreef 75, 3001 Leuven, Belgium and hereby duly represented by Luc Van den hove, President and CEO

relating to the research project under the Horizon 2020 – the Framework Programme for Research and Innovation (2014-2020), Call: H2020-ICT-2016-2017, Topic: ICT-13-2016 for the implementation of the project entitled "Orchestration and Reconfiguration Control Architecture" (hereinafter referred to as "ORCA" or "the Project)

Hereinafter individually referred to as the "Party" and jointly as the "Parties"

- WHEREAS as from January 1st, 2017, the Coordinator participates in the Project together with The Provost, Fellows, Foundation Scholars & The Other Members of Board of the College of the Holy & Undivided Trinity of Queen ("TCD"), Katholieke Universiteit Leuven ("KUL"), Technische Universität Dresden ("TUD"), National Instruments Dresden GmbH ("NI"), RUTGERS, The State University of New Jersey ("RUTGERS"), MARTEL GmbH ("MARTEL") (hereinafter collectively referred to as the "ORCA Partners" or "Beneficiaries";

- WHEREAS the ORCA Partners have amongst themselves entered into a written agreement detailing their respective rights and obligations under the Project;

- WHEREAS the purpose of ORCA to accelerate flexible end-to-end network experimentation by making open and modular software and hardware architectures available that smartly use novel versatile radio technology, more-specifically real-time Software Defined Radio (SDR) platforms meeting the requirements in terms of runtime latencies, throughput, and fast reconfiguration and reprogramming;

- WHEREAS the ORCA Platform consists of individual testbeds and tools put at the disposal by

different resource providers;

- WHEREAS the ORCA Platform can be enriched by adding extra functionality provided by third parties not participating in the Project;

- WHEREAS the Provider through the execution of the submitted proposal (hereinafter referred to as the "Proposal") under an open call (in accordance with the rules detailed in the open call documents) has applied to have its functionality added and integrated into the ORCA Platform and to make it available for use as described in the open call documents;

- WHEREAS on the basis hereof the Provider is entitled to use the testbeds of the ORCA Platform, to use and extend the software tools of the ORCA Platform, and make his "Extension" available for use by Experimenters subject to the terms and conditions described hereunder.

NOW, THEREFORE, the Parties agree as follows:

Article 1 - Definitions

When used herein, unless the context requires otherwise, the following words and expressions shall have the meaning as stated hereunder:

1.1. "Experiment(s)" means the experimentation activity(ies) undertaken by an Experimenter, alone or (if applicable) with the patron, for testing new ideas and technologies in the area of computer networking. Details of the Experiments can be found in the proposals submitted by the Experimenters in response to any open call.

1.2. "Maximum Budget" means the maximum amount of funding to be made available by the Coordinator to the Provider by way of financial support as further detailed in Appendix 1 hereto.

1.3. "Platform" means the ORCA testbed resources and tools in the ORCA facility. The Platform has been constructed for experiment-driven research activities, where experiment-driven research is defined as any activity that furthers the Experimenters' knowledge and/or understanding of concepts, algorithms, protocols of wireless solutions, provided that this activity is legal.

1.4. "Extension" means the specific functionality and components that are to be added to and integrated in the ORCA Platform in accordance with the terms and conditions of the Agreement as described in the Proposal.

Article 2 – Scope of the Agreement - Responsibilities

2.1. Subject to the terms and conditions set forth in the Agreement, the Provider

2.1.1. is hereby granted the non-exclusive, non-sub licensable, non-transferable right to use the available software tools within ORCA to integrate its Extension into the Platform. Any other

use of the software tools than the use for integration is not permitted. The Provider hereby grants to IMEC the non-exclusive, non-transferable, royalty-free and fully paid-up right, with the right to grant sub-licenses to third parties, to use, improve and/or modify the source code (being modifications and/or improvements made by the Provider (itself or on its behalf) to the software tools to integrate its Extension into the Platform) if and to the extent needed to allow the implementation of the ORCA goals (being to accelerate flexible end-to-end network experimentation by making open and modular software and hardware architectures available that smartly use novel versatile radio technology, more-specifically real-time Software Defined Radio (SDR) platforms meeting the requirements in terms of runtime latencies, throughput, and fast reconfiguration and reprogramming (hereinafter referred to as "the sustainability of ORCA")).

2.1.2. will put at the disposal the Extension integrated in the Platform for the performance of Experiments. The Extension is and remains the property of the Provider. No other rights than the rights expressly stated in the Agreement are granted with respect to the Extension.

2.2. Responsibilities of the Provider

2.2.1. The Provider shall perform its tasks in accordance with the conditions of the Agreement and the Proposal towards the inclusion of the Extension in the Platform to the best of its ability and in accordance with any guidelines issued by the Coordinator.

2.2.2. The Provider shall not, directly or indirectly:

- rent, lease, transfer or sub-license the software tools or the access to the ORCA Platform , nor permit any third party to do so;
- use the ORCA Platform to host commercial activities or in a way that limits the rights of others to use the ORCA Platform;
- remove, alter, cover or obscure any copyright notices or other proprietary rights notices placed or embedded on or in ORCA Platform;
- reverse engineer, decompile, disassemble, re-engineer, translate, adapt, create derivate works or updates of the ORCA Platform or any part thereof nor permit, allow, or assist any third party to do so.

2.2.3. The Provider acknowledges and agrees that besides the terms and conditions detailed in the Agreement, specific regulations of the other Party(ies) providing some of the testbeds in the Platform may apply. It is the Provider's responsibility to remain aware of all applicable regulations and of any changes made to them.

If there is evidence that the actions of the Provider are adversely impacting the quality offered by the Platform, the Coordinator is empowered to take reasonable measures to terminate or reprioritize usage in order to protect the overall operation of the Platform.

2.2.4. The Provider is responsible and liable for any and all actions performed with the software tools. The Provider undertake that it shall:

- comply with all instructions and regulations relating to the use of the and the software tools and access to the Platform;
- not use the software tools and/or the Platform in a manner which is or is likely to adversely affect the Platform or which may disturb the working of, interfere or damage the Platform or any other system. In case of misuse, the Provider is

responsible for restoring all damages to the Platform and is responsible for any loss and damages incurred;

- not interfere with others' work or attempt to invade their privacy;
- not use the software tools and the Platform in a manner that may damage the ORCA Partner'(s)'s good name and reputation or may infringe the intellectual or industrial property rights of a Party or any other third party. Copyright, other intellectual property right and data protection legislation must be observed by the Experimenter.

2.2.5. The Provider shall, in a timely manner, provide all information reasonably required by the Coordinator such as but not limited to the information required for the Coordinator to comply with its obligations under the Agreement, the Grant Agreement with the European Commission and the Consortium Agreement.

2.2.6. The Provider shall ensure that neither the Provider nor anyone of its behalf or with its consent causes any damage to the Platform and/or the software tools.

2.2.7. The use of the software tools and the Platform is at Provider's own risk and responsibility. The Provider acknowledges and agrees that the uninterrupted availability and use of the software tools and Platform cannot be ensured ("reasonable efforts").

2.3. The Extension, subject of the Proposal of the Provider, will be put at the disposal of the Experimenter free of charge for the Experiments at least until the end of the ORCA project . If required or desired for the sustainability of ORCA, the Provider will not unreasonably withhold its consent to put the Extension at the disposal for the sustainability of ORCA after the end of the Project free of charge.

2.4. The Coordinator shall give the Financial Support to the Provider for providing the Extension in accordance with the conditions detailed in article 3 of the Agreement.

Article 3 – Financial support

3.1. For the integration of the Extension and providing it for use in Experiments in accordance with the terms and conditions of the Agreement, the Coordinator agrees to provide within the Maximum Budget financial support to the Provider. Details can be found in Appendix 1.

3.2. Invoicing of the financial support will effectuated by the Coordinator for the Provider as detailed in the Open Call document. Payment is subject to receipt of the funding from the European Commission, acceptance by the Beneficiaries of the reports, code and documentation, and the attendance of the meetings as detailed in the Open Call documents.

3.3. The Provider hereby agrees to be bound by the obligations as set forth in the articles 22, 23, 35, 36, 38 and 46 of the Grant Agreement. These articles can be found http://ec.europa.eu/research/participants/data/ref/h2020/grants_manual/amga/h2020-amga_en.pdf

Article 4 – Intellectual property – Consent to use data

The Provider may receive feedback from the parties using the Extension for the performance of Experiments.

The Provider will deliver to the Coordinator the reports describing the results of the integration of the Extension and using the Extension and the experience gained from using the Platform with the Extension (the "Results"). These reports will be integrated into the reports to be provided to the European Commission and can be made public to all Beneficiaries including their Affiliated Entities.

Publications and demonstrations made on the Results should clearly mention the usage of the Platform and the provider and refer to the Project even if the publication or demonstration takes place after the end of Agreement.

Article 5 - Liability – Warranty

5.1. The Provider shall fully and exclusively bear the risks in connection with the integration of the Extension, including without limitation to any risk arising from the use of the Extension. The Provider shall hold harmless and indemnify the Coordinator and/or the ORCA Partners harmless against all losses, repayments, liabilities, claims or damages which the ORCA Partners and/or the Coordinator as a result thereof would incur or suffer or have to pay to the European Commission or any third parties. In addition, should the European Commission have a right of recovery against the Coordinator or any other Beneficiary regarding any or all of the Financial Support granted under the Agreement, the Provider shall repay the sums in question in the terms and on the dates stipulated by the Coordinator.

5.2. No warranty whatsoever is given with respect to the Platform, support and all information provided hereunder including, but not limited to, any express or implied warranty for use, availability, reliability, quality, fitness for a particular purpose or non-infringement of third party intellectual property rights. They are provided "AS IS".

5.3. To the extent authorized under mandatory law, in no event shall the Coordinator or any of the other Beneficiaries be liable to the Provider or any person or entity connection with any of them for costs of procurement of substitute goods, property damage, personal injury, profit loss, business interruption, or for any other special, indirect, consequential or incidental damages, however caused, whether for breach of warranty, contract, tort or negligence, strict liability or otherwise.

The Coordinator's liability in aggregate, arising out of or in connection with the Extension and/or the Agreement, however caused, whether for breach of warranty, contract, tort or negligence, strict liability or otherwise, shall not exceed the Maximum Budget.

5.4. The Coordinator is not liable for any failure due to the direct or indirect use, loss of use, or delay in delivery of the Platform or the services provided herein, unless the Provider can show willful misconduct, fraud or deceit by the Coordinator.

Article 6 – Term and termination of the Agreement

The Agreement enters into force on the date detailed in Appendix 1 until the end of the Project or for the period provided in Appendix 1, unless sooner terminated in accordance with article 6. The Provider acknowledges and agrees that its authorized access and use of the Platform and use of the software tools, all in accordance with the terms of the Agreement, is only effective during the term of the Agreement.

The Provider's right to access and use the Platform, use of the software tools and the Agreement are automatically and without notice from the Coordinator terminated if the Provider fails to comply with any of the obligations detailed in the Agreement.

Article 7 - Applicable law

The Agreement is governed by the laws of Belgium without reference to its conflict of law principles. Any dispute arising out of the Agreement shall be settled by the competent courts located in Brussels (Belgium).

Article 8 - Miscellaneous

8.1. The Provider represent and warrant that the Platform shall not be evaluated or employed for the purpose of use in the design, development, production, stockpiling or use of weapons of mass destruction, such as nuclear, chemical or biological weapons or in any manner for a military end use or with a military end-user. The Provider shall comply with applicable laws and regulations controlling the export of technical data, computer software and all other export controlled commodities and ensures that it will not include the participation of persons on any restricted party listing in accordance with applicable national and international regulations. The Provider agrees to indemnify, defend and hold harmless the Coordinator and the other ORCA Partners from any and all claims, damages and other liabilities resulting from the Provider's violation of any applicable export regulations.

8.2. The Parties may sign and deliver this Agreement by electronic transmission. Each Party agrees that the delivery of this Agreement by electronic transmission shall have the same force and effect as delivery of original signatures and that each Party may use such electronic or facsimile signatures as evidence of the execution and delivery of this Agreement by the Parties to the same extent that an original signature could be used.

AS WITNESS, the Parties have caused the Agreement to be duly signed by the undersigned authorised representatives in separate signature pages.

For Provider,

Name:
Title:
Date:

For IMEC,

Luc Van den hove
President & CEO
Date:

Appendix 1:

Extension – financial information

Duration of the Agreement:
Start date: xxx
End date: end of the Project (currently 31/12/2019)

Maximum Budget: xxx k€

Payment conditions (subject to payment conditions detailed in article 3.3): (timing of the payment, unless this is included in the open call document)