Orca

Orchestration and Reconfiguration Control Architecture

PROTOTYPING AND EXPERIMENTATION OF MULTIPLE RADIO ACCESS TECHNOLOGIES (RAT)

SDR PLATFORM FOR PROTOTYPING OF REAL-TIME WIRELESS NETWORKS

5G services are envisioned to utilize different RATs to fulfil ambitious requirements w.r.t. data rate, latency, reliability, co-existence, coverage, etc.

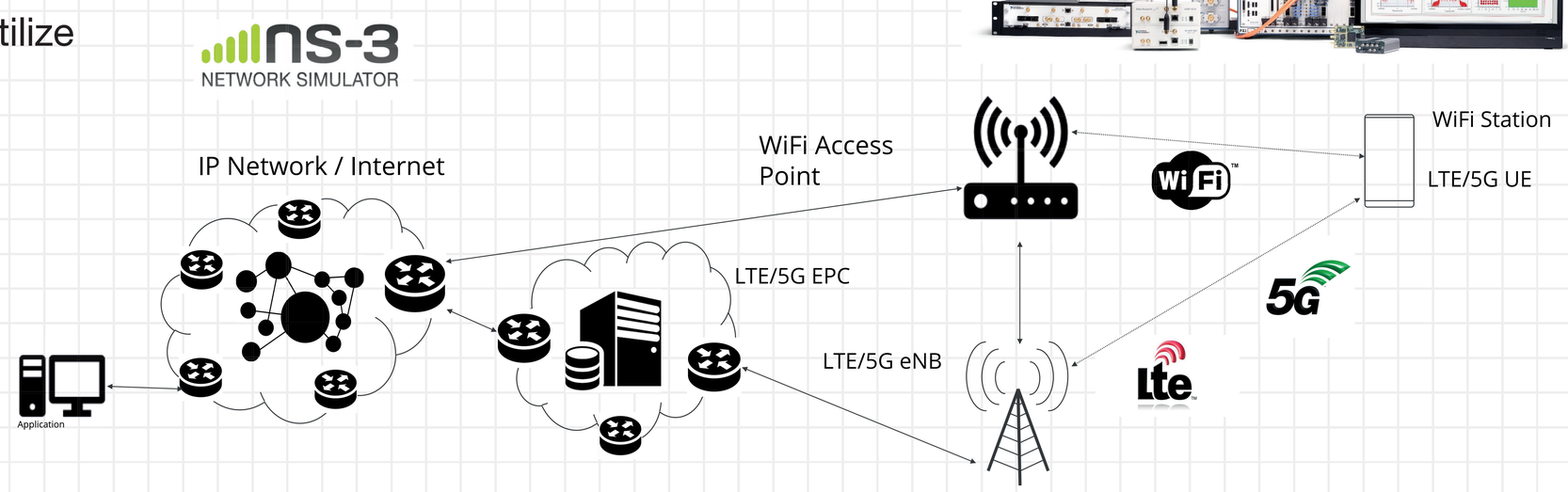

ORCA MULTI-RAT END-TO-END EXPERIMENTATION PLATFORM BELOW 6 GHZ

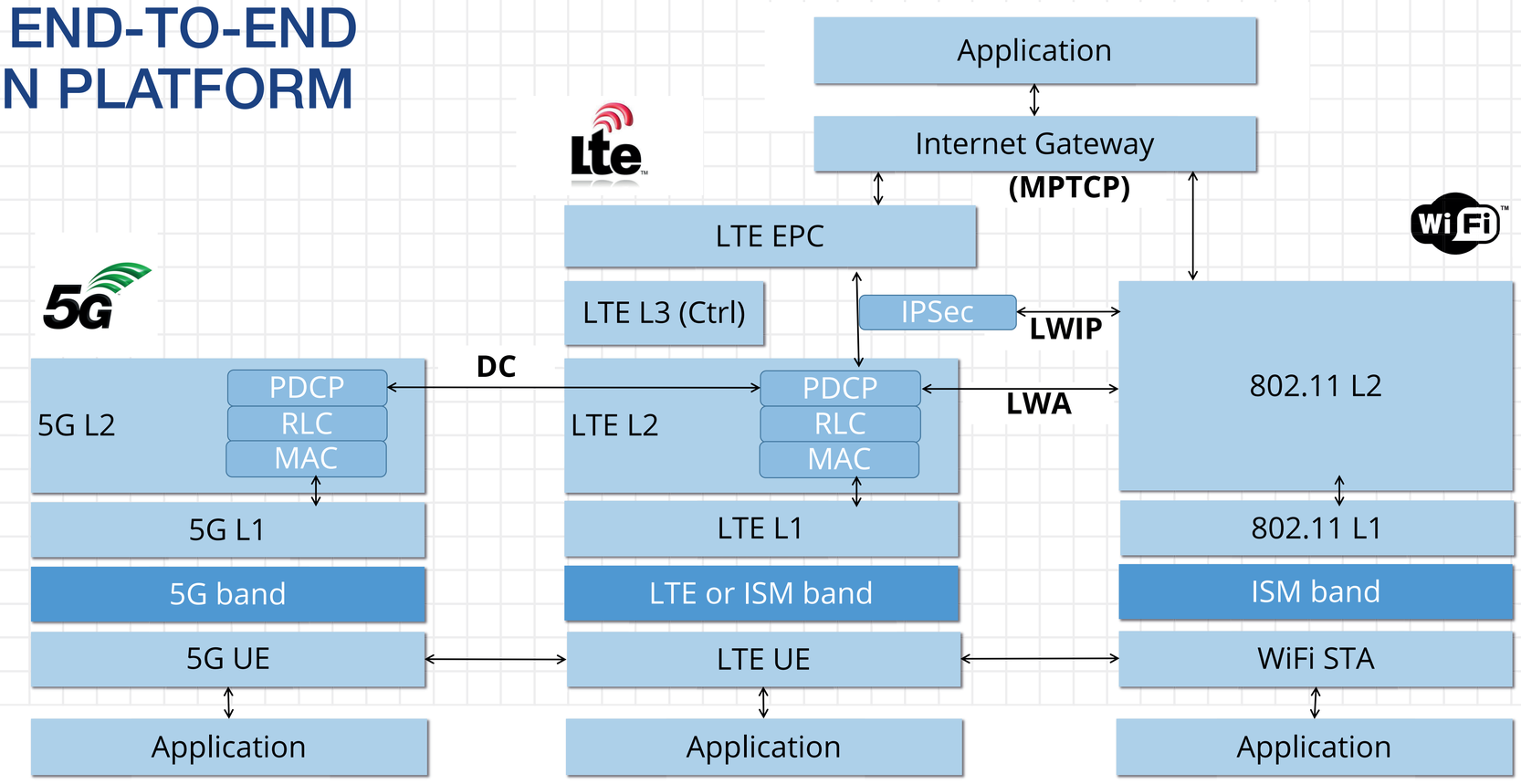

LTE-WIFI NETWORKING AND INTERWORKING SYSTEM

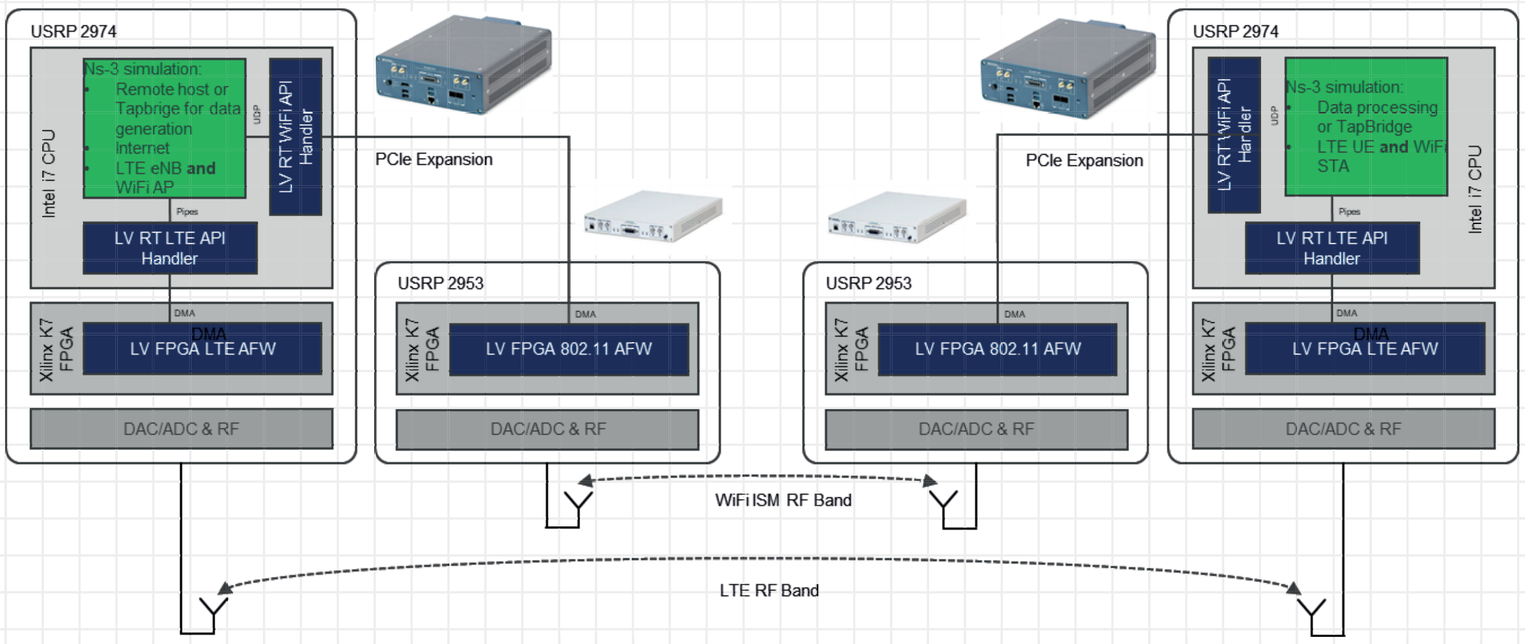

CONSORTIUM

imec · Trinity College Dublin · National Instruments · Martel Innovate · KU Leuven · Technische Universität Dresden · Rutgers

@ORCA_Project_

groups/8589461

www.orca-project.eu

The ORCA project is funded by the European Horizon 2020 Programme under grant agreement n°732174